ISDEMİR PORT
DANGEROUS GOODS GUIDE (DGG)

Preparation Date: 05.02.2016

Mr. Murat KARAKAYA
Port Manager

CONTENTS

PRESENTATION:

A regulation on “Safe Transport of Dangerous Goods in Port Areas”, dated March 3, 2015 numbered 29284 was put into force by the Ministry of Transport Maritime Affairs and Communications upon its publication in the Official Gazette. On December 4, 2015, issued under the Dangerous Goods Regulations Guide Implementation Directive (2015/275) it is obliged by the scope of the regulation to be prepared "Dangerous Goods Guide” by harbor and the coastal resort until January 1, 2016. Within the framework of the legislation, ISDEMIR Port Dangerous Goods Guide (DGG) has been prepared.

AIM OF THE GUIDE:

The aim of ISDEMİR Port Dangerous Goods Guide (DGG) is to reveal the main outline of the specified procedures and principles for the handling of dangerous substances in a safe way and to ensure explanation of the measures to be taken in order to provide the life, property and environmental safety.

SCOPE OF THE GUIDE:

This guide includes Dangerous Goods Agencies, the captains sailing ships which carry Dangerous Goods and the Coastal Plant Operators (Iskenderun Demir ve Celik A.S. Port).

LEGAL FRAMEWORK:

This guide has been prepared within the framework of the No. 29284 dated on 3rd of March 2015 Regulation on the “Safe Transport of Dangerous Goods in Port Areas” and dated on 4th of December 2015 directive on the “Dangerous Goods Guide Implementation (2015/275)” published by the Ministry of Transport Maritime Affairs and Communications.

Once additional instructions issued by the Administration on the Dangerous Goods Guide or comprehensive technical and administrative changes implemented on ISDEMIR shore facilities, Dangerous Goods Guide will be revised by ISDEMIR.

Hereby with this document, Dangerous Goods Guide (DGG) provisions must be followed by ship captains and supercargo in accordance with changing national and international standards. This guide has been prepared as an advisory manual and interested parts are obliged to take related preventive measures and legal responsibility even if not specified in this guide. Iskenderun Demir ve Çelik A.Ş. reserves the right to change this guide without any additional notification. Current version of the Guideline is at the Port archive records. There are only copies over the Internet for INFORMATIVE purposes.

This guide and its contents can never be contrary to the requirements of national and international legislation and do not remove the parties' responsibilities under national and international legislation. If there may occur a conflict between this guide and national and international legislation, the provisions of the relevant national and international legislation are applicable.

REVISION PAGE

Item no	Revision no	Revision content	Revision date	Reviser's Name &Surname and Signature
1	1	6.6 - 6.7 - 6.8 - 6.9 - 6.10 - 6.11 - 6.12 - 6.13 - 6.14 have been added as Operational Procedures and duties section.	06.03.2017	M.Selçuk DÖNMEZ
2	2	1.2 (a) 9, 1.2 (b) 12, 2.1 (1), 2.1 (2), 2.1 (4), 2.2 (3), 2.2 (5) a and 3 (3) as there is no handling operation falling within the scope of the IMDG Code at the Port Facility. Items has been removed.	10.08.2017	Önder ÇAĞLAYAN
3	3	The main characteristics of hazardous cargo handled in accordance with the new directive (April 10, 2017) are given in Section 4.1 Dangerous Goods Classes.	10.08.2017	Önder ÇAĞLAYAN
4	4	The phrase, which is referred to in Chapter 6.1 D -5, has been revised as "Emergency".	10.08.2017	Önder ÇAĞLAYAN
5	5	Section 2.2 Personnel table responsible for handling hazardous solid bulk loads has been revised.	10.08.2017	Önder ÇAĞLAYAN
6	6	Section 6.14 EmS Fire and Spill Guides for UN 1408 Ferrosilicon, UN 2793 Metal Clamp, UN 1999 Tar, UN 1114 Benzol are added.	10.08.2017	Önder ÇAĞLAYAN
7	7	MFAG-related hazardous chemicals handled on site sections have been added.	10.08.2017	Önder ÇAĞLAYAN
8	8	Revision of Dangerous Liquid Bulk Operations Procedures	11.12.2017	Önder ÇAĞLAYAN
9	9	Revision of Benzol UN number	29.06.2018	Önder ÇAĞLAYAN
10	10	Facility information form has been revised.	29.06.2018	Önder ÇAĞLAYAN
11	11	Section 2.2 Personnel table responsible for handling hazardous cargo has been revised.	29.06.2018	Önder ÇAĞLAYAN
12	12	Reportin method of accidents procedure has been revised	25.09.2018	Önder ÇAĞLAYAN
13	13	Safe Handling of Dangerous Solid Bulk Cargo Procedure included	26.09.2018	Önder ÇAĞLAYAN

TABLE OF CONTENTS

6.8	Safe Handling Procedure of Dangerous Liquid Bulk Cargo (Coal Tar UN 1999)	
6.9	Safe Handling Procedur of Steel Scrap in Bulk	
6.10	Measurement Procedure of Radiation	
6.11	Radiation Detection and Radioactive Materials Handling Procedure	
6.12	Hot Work Procedure	
6.13	Usage of MFAG Procedure	
6.14	Usage of EmS Procedure	
7.	**DOCUMENTATION, CONTROL AND RECORD**	
7.1	Procedures for defining, providing and controlling of all necessary documents and information relating to Dangerous Goods	
7.2	Procedures for keeping the current list of all Dangerous Goods existing at the coastal facility site and other information systematically	
7.3	Procedures for the right definition of Dangerous Goods entering to the facility, using the correct shipping name of the Dangerous Goods, classification, certification, packaging, labeling and announcing, whether approved and standardized package used or not, loading to the load carrying unit safely, shipping, controlling and reporting of control results	
7.4	Preparation, possession and use of Dangerous Goods safety information sheets (DGSS)	
7.5	Keeping procedures for record and statistics of Dangerous Goods	
8	**EMERGENCY CASES, PREPAREDNESS AND RESPONSE TO EMERGENCY**	
8.1	Intervention methods for Dangerous Goods posing risk to life, property and/or environment and other dangerous cases which Dangerous Goods involved in.	
8.2	Capacity, ability and opportunity of coastal facility in case of emergency	
8.3	Arrangements for the first responses for accidents involving Dangerous Goods (first response methods and procedures, resources and capabilities and so on issues)	
8.4	Necessary notification to be made in case of emergency inside and outside of the facility	
8.5	Reporting Methods of the Accidents Procedure	
8.6	Coordination with formal authorities, support and cooperation methods	
8.7	Emergency evacuation plan for the removal of the ships and boats from the coastal facility in case of emergency	
8.8	Procedures for disposal and handling of waste involving Dangerous Goods and damaged dangerous cargoes	
8.9	Emergency training and their records	
8.10	Information on the fire protection system	
8.11	Procedures for approval of the fire protection system, control, testing, maintenance and making available for use	
8.12	Measures to be taken in cases where the fire protection system is out of work	
8.13	Other risk control equipment	
9	**OCCUPATIONAL HEALTH AND SAFETY**	

9.1	Occupational health and safety measures	
9.2	Information about personal protective clothes and procedures for using them	
10	**OTHER CONDITIONS**	
10.1	Validity of Dangerous Goods Conformity Certificate	
10.2	Defined tasks for Dangerous Goods Safety Adviser	
10.3	Issues on ships transporting Dangerous Goods leaving/coming to the coastal facility by land (necessary documents that road vehicles carrying Dangerous Goods have during entrance and exit from coastal facility site or port, equipment and tools that vehicles must have, speed limits at port etc.; measures to be taken regarding the threats and attacks from land and sea)	
10.4	Issues on ships transporting Dangerous Goods lay of/on from the coastal facility by sea (lighthouse or signs shown by the ships transporting Dangerous Goods and marine vessels at coastal facility, cold or hot work procedures at the ships etc.)	
10.5	Other issues added by coastal facility	
10.6	Hazardous Waste Management	
	Definitions/Abbreviations	
	APPENDIXES	
1	General Layout of the Coastal Facility	
2	General Overview Photos of the Coastal Facility	
3	Emergency Contacts Points and Contact Information	
4	General Layout of Handling Site of Dangerous Goods	
5	Fire Plan of Handling Site of Dangerous Goods	
6	Facility General Fire Plan	
7	Emergency Response Plan	
8	Emergency Collection Location Plan	
9	Emergency Organization Chart	
10	Dangerous Goods Manual	
11	Port Authority Administrative Boundaries, Mooring Places and Sea Point Coordinates of Maritime Pilots landing / boarding points	
12	Emergency Response Equipment Against Port Marine Pollution at Port Facility	
13	Personal Protective Equipment (PPE) Use Map	
14	Dangerous Goods Incidents Reporting Form	
15	Required Number of tugboat that a ship should have based on the gross tonnage and tractive force of the tugboat	
16	Trainings taken by terminal staff and its content	
17	Petroleum Pollution Emergency Response Plan	
18	Port Operation Instructions	
19	Waste Management Instruction	

1. INTRODUCTION

1.1. General overview of the facility

FACILITY INFORMATION FORM

1	**Name and title of the facility operator**	**Iskenderun Demir ve Celik A.S.**
2	**Contact information of the facility operator (address, tel, fax, e-mail and web page)**	**Iskenderun Demir ve Çelik A.Ş. 31319 Payas/Hatay** **Tel: 326 758 40 80 – Faks: 326 755 3759** **isdemirlimani@isdemir.com.tr** **www.isdemir.com.tr**
3	**Name of the Facility**	**İskenderun Demir ve Çelik A.Ş. Port**
4	**Name of the city facility located in**	**HATAY**
5	**Contact information of the facility (address, tel, fax, e-mail and web page**	**Iskenderun Demir ve Çelik A.Ş. 31319 Payas/Hatay** **Tel: 326 758 40 80 – Faks: 326 755 3759** **isdemirlimani@isdemir.com.tr** **www.isdemir.com.tr**
6	**Geographic region facility located in**	**Mediterranean Region**
7	**Port Authority which facility is affiliated with and its contact information**	**Iskenderun Port Authority** **Address: Çay Mah. 5. Temmuz Cad. İskenderun** **Tel: +90 326 613 27 40 – 614 11 92 Fax: +90 326 614 02 26**
8	**Metropolitan Municipality which facility is affiliated with and its contact information**	**Payas Municipality** **Tel: +90 326 755 78 00 - +90 326 755 10 11** **Fax: +90 326 755 78 08** **E-Mail: payasbel@gmail.com** **Address: Yıldırım Beyazit Mah. Şehit Yüzbaşı Ali Oğuz Bulvarı No:48 Payas/HATAY**
9	**Free Zone or the name of the Organized Industrial Zone where the facility located in**	**Facility is not regarded as Free Zone**
10	**Effective date of the Coastal Resort of Operation Permit**	**28.10.2016**
11	**Facility Operating Status (x)**	**Own freight including third parties**
12	**Name, surname and contact information of facility responsible (tel, fax, e-mail)**	**Murat KARAKAYA – Port Manager** **Tel: +90 326 758 30 79 Fax: +90 326 755 34 94** **E-Mail: mkarakaya@isdemir.com.tr** **www.isdemir.com.tr**
13	**The name and surname of the dangerous goods responsible for the operation of the facility communication details (tel, fax, e-mail)**	**Murat KARAKAYA – Port Manager** **Tel: +90 326 758 30 79 Fax: +90 326 755 34 94** **E-Mail: mkarakaya@isdemir.com.tr** **www.isdemir.com.tr**
14	**Name and Surname of the Dangerous Goods Safety Adviser of the facility and contact information (tel, fax, e-mail)**	**Appointed until January 2018**
15	**Sea Coordinates of the Facility**	**36^0 43’30’’ N - 36^0 11’ 06’’ E**
16	**Dangerous Goods type handled at the facility (Cargoes included in MARPOL Annex, IBC Code, IMSBC Code and asphalt/ bitumen and scrap cargoes)**	**IBC Code – COAL TAR (UN 1999 - Tars, Liquid)** **IBC Code - BENZOL (UN 1114 - Crude Benzene Flammable Liquid)**

		IMSBC Code – FERROUS METAL BORINGS, CUTTINGS (UN - 2793) **IMSBC Code – FERROCILICON (UN 1408)**
17	**Types of ships that can dock facility**	**General cargo, Bulk cargo, Chemical Tanker, Petrol Product Tanker**
18	**Distance to the main road**	**4 km**
19	**Distance to the railway (km) or railway connection (Yes/No)**	**Directly Connected to National Railway Network**
20	**The nearest airport name and distance (km)**	**Adana Airport - 130 km distance & Hatay Airport – 80 km distance**
21	**Facility cargo handling capacity (tons / year; Ton/ year; Tools / Year)**	**17.500.000 Tons/Year**
22	**Whether scrap handling performed or not at the facility**	**Yes**
23	**Is there a border gate? (Yes/No)**	**No**
24	**Have customs zone? (Yes/No)**	**Yes**
25	**Cargo handling equipment and capacity**	**Port Cranes, Piping System, Conveyor System**
26	**Storage tank capacity (m^3)**	**20.000 m^3 (Tar Tank), 60 m^3 (Benzol Tank)**
27	**Outdoor storage area (m^2)**	**1.072.248 m^2**
28	**Semi-closed storage area (m^2)**	**No**
29	**Indoor storage area (m^2)**	**4.096 m^2**
30	**The designated fumigation and / or purifying area (m^2)**	**Fumigation not carried out**
31	**The name title and contact details of pilotage and towage services provider**	**İskenderun Demir ve Çelik A.S. Port Guide Services**
32	**Is there a security plan? (Yes/No)**	**Yes**
33	**Facility Waste Acceptance Capacity (Tanks, vacuum truck, sewage, separators, containers and other equipment)**	**Dirty Ballast (0 m^3), Slop (40 m^3), Waste Oil (10 m^3), Sludge (60 m^3), Bilge Water (100 m^3), Toxic Liquid Waste (10 m^3), Waste water (2500 m^3), Waste Material & Garbage (24 m^3)**
34	**Properties of pier/landing sites**	

Pier/ Landing site no	**Length (m)**	**Width (m)**	**Maximum water depth (m)**	**Minimum water depth (m)**	**Largest tonnage and length to be berthed (DWT or GRT – meter)**
No.1 Pier	**500**	**-**	**19**	**19,20**	**200.000**
No.2 Pier	**240**	**-**	**12**	**12,50**	**50.000**
No.3 Pier	**260**	**-**	**7,5**	**8,00**	**8.000**
No.4 Pier	**220**	**-**	**13,5**	**13,70**	**55.000**
No.5 Pier	**200**	**-**	**13**	**13,20**	**55.000**

The name of the pipeline (if exists in the facility)	**Number**	**Length (m)**	**Diameter (inch)**
Benzol Pipe Line Over Dolphin Jetty	**1**	**90**	**6**
Number 1 Sea Bottom Pipe Line1 (Benzol)	**3**	**110**	**6**
Tar Pipe Line over Dolphin Jetty	**1**	**90**	**6**

		Sea Coordinates	**Number**	**Water Depth (m)**	**The Biggest Ship that can land (DWT/GRT)**
	Number 1 Dolfen	**360 43’50’’ N, 360 11’ 15’’**	**1**	**14**	**12.500 DWT**

1.2 Handling, shipment, discharge and storage procedures of temporarily stored and handled Dangerous Goods cargos at the coastal facility

All Dangerous Goods in the facility are handled according to IBC Code and IMSBC Code.

There has been no handling process for loads included ADR, MARPOL Annex-1, IBC Code, IGC Code, Grain Code, TDC Code and waste, freight waste and project cargos.

a. Dangerous Liquid Goods and Countermeasures:

Measures are to be taken for Coal Tars (UN 1999 – Tars, Liquid):

(1) It shall be kept away from sources of ignition,

(2) Damaged or leaking storage tanks and pipelines will not be used in any way and maintenance is carried out as soon as possible,

(3) Storage tanks and pipelines will be protected from damage or overheating resulted from an accident,

(4) Lighting and power cables connections will be kept in good condition to prevent danger from short circuit, earth leakage and sparks and connections of unsafe cable and equipment will be disabled,

(5) Flammable vapors forming explosive mixtures with air might form in the storage tanks. Such vapors can get flash back if get fires. Therefore, sufficient ventilation will be provided to vapor accumulation,

(6) Working areas will sufficiently be ventilated, inhalation of vapor will be avoided, in case of unacceptably excessive amount of air pollution level in the facility approved inhalation devices and apparatus will be used, contact of product with skin and eyes will be avoided,

(7) Contaminated clothes and shoes will be disposed, precautions against static electrical discharge will be taken,

(8) Due to explosive/inflammable-oxidize properties of tar, it will be kept away from high temperature and flame, no storage nor handling will be operated near heat generated areas, it will not be exposed to high temperature, physical damage or friction will be avoided, storage will be carried out in cool, well-ventilated and dry place, storage will be operated in well-designed tanks considering upon chemical properties of tar, warning and caution plates will not be removed regarding potential residual tar in the tank,

(9) Entrance of any kind of motor vehicle is strictly prohibited during cargo operations.

Measures are to be taken for Crude Benzol (UN 1114 – Crude Benzene):

(1) Prior, during and after loading operations, dolphin jetty atmosphere is to be checked by using gas detectors,

(2) Damaged and leaking tanks and pipe lines will never be used and maintenance of damaged equipment will be completed immediately,

(3) Tanks and pipe lines are to be protected from any kind of damage and the incidental heating,

(4) Smoking is strictly prohibited at dangerous areas and "NO SMOKING" placards are to be shown in places,

(5) Short circuit, grounding and spark risks from the lighting and power cables are prevented by the means of good maintenance, any unsafe cable and equipment in scene will be disconnected from power sources,

(6) In order to avoid explosive atmosphere around storage tanks, there should be good ventilation or air circuit around the tanks,

(7) Due to well-know toxic and explosive nature of benzene, all hands are to use necessary personal protective equipment,

(8) Heat and spark sources are to be eliminated from the operational scene,

(9) Hydraulic pressure equipment, cutting, melting equipment are to be eliminated from the operational scene,

(10) Warm, dry and well ventilated tank area is a right place for storage,

(11) Avoid contact with the skin, hands are to be washed before having meal and having meal at storage area is strictly prohibited, dirty clothes are to be disposed,

b. Dangerous Goods with respect to IMSBC Code and taken measures:

Measures to be taken for ferrous (III) metal borings, cuttings (UN 2793-Ferrous Metal Borings, Cuttings):

(1) One sided unloading which may cause imbalance of ship will be avoided,

(2) Before loading/unloading warehouses and compartments will be controlled regarding potential fire, self-ignition, leakage etc.,

(3) Necessary precautions will be taken against leakage and separation of dangerous goods/mixing with bilge water,

(4) Bilge water pipes and life support pipes passing through dangerous goods warehouses and compartments will be checked in order to obtain sustainable and good condition,

(5) Ventilation system will be shut down during loading/unloading, special precautions will be taken in order to minimize the level of polluted air, movement of polluted air through living compartments will be prevented,

(6) Necessary precautions will be taken in order to prevent effects of metal powders on ship equipments, moving parts, navigational aids while working,

(7) All the scrap bunkers area will be cleared from spilled scraps at the end of each watch,

(8) Other detailed loading/unloading/shipment handling and storage procedures will be applied with respect to related IMSBC CODE requirements.

Measures to be taken for Ferrocilicon (UN 1408):

(1) Cargo must be protected from the contact of water,

(2) After opening of each cargo hold, the atmosphere must be checked by using gas detector, and in case of detection of PH3 gases, the gang will disembark from the vessel and master will be advised accordingly,

(3) Spillage preventing equipment will be rigged before commencing discharge operations,

(4) All precautions are to be taken in order to prevent spillage of the cargo,

(5) Before entering cargo hold, lighting and ladders are to be checked whether they are working and in good condition or not,

(6) All spilled cargo during discharge operation and accumulated on the berth will be collected at the end of each watch,

(7) All other practices of handling the specified cargo will be conducted as per IMSBC Code,

2. RESPONSIBILITIES

2.1.Responsibilities of Supercargo is Defined Below:

(1) Supercargo is responsible for preparing / making ready all necessary documents and information such as Dangerous Goods Transportation Document related to Dangerous Goods, information and provide them to be available during transportation with the Cargo.

(2) Provides classification, identification, packaging, marking and labelling of the dangerous in accordance with IMSBC and IBC Code.

(3) Provides secure installation, stacking, transportation and unloading of dangerous Cargo in to the appropriate tankers according to the IBC Code and ISGOTT.

(4) Provides training courses for all relevant personnel about risk of Dangerous Goods transported by seaway, emergency measures, safe operation, emergency response measures, security and other similar issues and recording of all training activities.

(5) Provides necessary measures to be taken for unsafe, unstandardized, Dangerous Goods that pose a risk to people or the environment. In this context, provides recovery packaging and of Dangerous Goods which has risk of material loss or leakage or packaged in a non-standardized way and storing in another safe site and keeping records. If there is bulk around sea coastal facility or leakage from pier to the sea, immediately informs company authorized person to provide collecting of bulk by the contracted emergency response company.

(6) In case of emergency or accident, provides necessary information and support to the company administration /TMGD about class of the dangerous or spilled substances caused explosion, dangerous risks, amount of spillage/leakage and disposal methods.

(7) Notifies operation administration/TMGD about occured accidents related to dangerous Cargo.

(8) Provides the requested information and documents and necessary cooperation during controls performed by the public authorities.

2.2. Responsibilities of the coastal facility operator is given below:

(1) Provides ships' appropriate and safe approach and bonding to the port by their own machine power or guidance and tug considering adverse conditions effecting cargo security such as harbor entrance traffic, meteorology and Harbor Regulation and other related maritime legislations.

(2) Provides entrance and exit operations between ship and shore by considering safety and security of the ship's personnel, Dangerous Goods and coastal facility within the framework and instructions specified in Port Operation Instruction.

(3) Provides training courses for all relevant personnel about risk of Dangerous Goods transported by seas, emergency measures, safe operation, emergency response measures, security and other similar issues and recording of all training activities.

(4) Provides transporting, handling and controlling of the Dangerous Goods in the operation site by qualified, trained personnel who have taken necessary occupational safety precaution within the rules and instructions specified in Port Operation Instruction.

(5) Prepares following documents and certificates for outgoing dangerous goods, requests these documents together with MSDS sheets and controls required documents and documents:

(a) Emergency response information:

Considering outgoing of dangerous goods, required information and documents in order to use them as emergency response actions in case of any type of accident or incidents related to dangerous goods during transport must be kept ready and always be available. These information and documents must be kept far from dangerous goods' packages and in case of any accident or incidents, they must be easily accessible. In this context, a special list specified above, Manifesto or Medical First Aid Guide (MFAG) including appropriate inputs with regard to dangerous goods declaration and dangerous goods and Emergency Response Procedures for Ships Carrying Dangerous Goods (EmS) together with transport certificate must be available.

(6) Provides keeping the current list of all Dangerous Goods in the operation site within the framework of ISDEMIR Port Operation Instruction.

(7) Provides training courses for all operation personnel about the risk of handling of Dangerous Goods, precaution measures, safe work conditions, emergency response measures and other similar issues and recording of all training activities.

(8) Takes the necessary safety measures for Dangerous Goods that pose a risk to life or environment and report the information about class and the amount of the substances to the port authority.

(9) Provides emergency response arrangements and inform all relevant people about these issues. In this context, prepare the necessary procedures regarding measures to be taken in case of emergency, makes trainings or obliges them to be made, establishes necessary organizations and provides required equipment to be ready Fire intervention will be performed as specified in App-7/ISDEMIR Emergency Response Plan. Training of personnel involved in the response plan and information about the firefighting is also included in the same appendix. In case of leakage / spillage of Dangerous Goods from ship or pier to the sea, it will be intervened within the framework of ISDEMIR Emergency Response Plan. Emergency response equipment used against coastal marine pollution at the coastal facility is given in App-12. First aid, emergency response and other emergency cases procedures will also be carried out in the framework of ISDEMIR Emergency Response Plan.

(10) Reports the class and amount of the Dangerous Goods accidents occurred in the operation site to the ISDEMIR Senior Management Board and Iskenderun Port Authority with accident/incident reporting form given in App-14.

(11) Provides the necessary support and cooperation during controlling procedures performed by public authority.

(12) Activities related to Dangerous Goods are performed at pier and storehouses designed for that purposes.

(13) Supplies well-qualified and appropriate equipment for ship and marine vehicles used for load/unloading activities of bulk petrol and petroleum products.

(14) Do not let naval ships carrying Dangerous Goods approach to the pier and dock without the permission from the port authority.

(15) Takes necessary safety measures against hot, cold, heat and other dangers during loading/unloading and transshipment activities. Flammable materials are kept away from spark-forming process and during handling process of Dangerous Goods tools or equipment that makes up sparkling must not be used. Procedures for those issues are as mentioned in the ISDEMIR Port Operation Instruction.

(16) Provides the evacuation of the ship and vessels from the coastal facility in case of emergency response. In this content, in case any emergency situation such as fire, earthquake, large-scale explosion and similar events which require emergency evacuation action from ISDEMIR Port and emergency responses, stops all ships in the port to operate their operational activities. Arranges recall of entire personnel by ships, preparation and readiness of supplementary shift and movement/action team if required, start-up of required machines, unmooring ships' ropes or cutting-off. Arranges within the knowledge of ship guide center and Port Authority, via tugboats if not possible via ship machines, ships are evacuated from port and emergency mooring action should be operated in the section where ISKENDERUN Port Authority indicates and keep ships and personnel in a safe location.

The list of the personnel responsible for hazardous cargo operations at Isdemir Port and their job descriptions are as follows,

LIST OF PERSONNEL RESPONSIBLE FOR HAZARDOUS SOLID BULK CARGO				
REG.NO	**NAME SURNAME**	**DUTY**	**MOBILE**	**TELEPHONE**
D00135	ERHAN TİRYAKİ	**Foreman** Before ferrosilicon discharge operations, brings the appropriate grabs and bunkers to the ship. The ramps are set on the shipboard to prevent the material from falling into the sea. After the hatch covers are opened and the workers check the gas with the mobile detector before they go down to the cargo hold. In emergency situations, Port workers will act according to the emergency plan the ADP.0003.	(539) 551-2472	4080 - 4680
D00005	HÜSEYİN GÖR	**Foreman** Before ferrosilicon discharge operations, brings the appropriate grabs and bunkers to the ship. The ramps are set on the shipboard to prevent the material from falling into the sea. After the hatch covers are opened and the workers check the gas with the mobile detector before they go down to the cargo hold. In emergency situations, Port workers will act according to the emergency plan the ADP.0003.	(539) 551-2472	4080 - 4680
D00133	AYDIN FATİH KAHVECİ	**Foreman** Before ferrosilicon discharge operations, brings the appropriate grabs and bunkers to the ship. The ramps are set on the shipboard to prevent the material from falling into the sea. After the hatch covers are opened and the workers check the gas with the mobile detector before they go down to the cargo hold. In emergency situations, Port workers will act according to the emergency plan the ADP.0003.	(539) 551-2472	4080 - 4680
D00134	SALİH CİVELEK	**Port Operations Team Leader** Before ferrosilicon discharge operations, brings the appropriate grabs and bunkers to the ship. The ramps are set on the shipboard to prevent the material from falling into the sea. After the hatch covers are opened and the workers check the gas with the mobile detector before they go down to the cargo hold. In emergency situations, Port workers will act according to the emergency plan the ADP.0003.	(539) 551-2472	4080 - 4680
D00131	FATİH BİLGİN	**Port Operations Team Leader** Ferrosilikon tahliyesinden önce uygun kepçe ve bunkeri gemi önüne getirtir. Malzememin denize düşmesini önlemek için rampaları gemi bordasına dayar. Ambarlar açıldıktan sonra ve işçiler ambara inmeden önce mobil dedektör ile gaz kontrolü yapar. Acil durumlarda ADP.0003 Liman acil durum planına göre hareket eder.	(539) 551-2472	4080 - 4680
D00157	YAKUP SERT	**Port Operations Officer** Before ferrosilicon discharge operations, brings the appropriate grabs and bunkers to the ship. The ramps are set on the shipboard to prevent the material from falling into the sea. After the hatch covers are opened and the workers check the gas with the mobile detector before they go down to the cargo hold. In emergency situations, Port workers will act according to the emergency plan the ADP.0003.	(539) 551-2472	4080 - 4680
D00142	İBRAHİM GÖK	**Port Operations Officer** Before ferrosilicon discharge operations, brings the appropriate grabs and bunkers to the ship. The ramps are set on the shipboard to prevent the material from falling into the sea. After the hatch covers are opened and the workers check the gas with the mobile detector before they go down to the cargo hold. In emergency situations, Port workers will act according to the emergency plan the ADP.0003.	(539) 551-2472	4080 - 4680

LIST OF PERSONEL RESPONSIBLE FOR HANDLING OF BENZENE AND COAL TAR				
REG.NO	**NAME SURNAME**	**DUTY**	**MOBILE**	**TELEPHONE**
203276	MÜSLÜM YILDIZ	**By Products Foreman** Before and after the loading of benzene, equipment, etc. control and follow the loading procedures. It works in coordination with the Water Facilities Department at tar loading and follows loading procedures.	(532) 693-1199	5533-5586
206649	DURAN ŞİMŞEK	**By Products Foreman** Before and after the loading of benzene, equipment, etc. control and follow the loading procedures. It works in coordination with the Water Facilities Department at tar loading and follows loading procedures.	(541) 292-4511	5533-5586
206145	ENDER ÖZ	**By Products Foreman** Before and after the loading of benzene, equipment, etc. control and follow the loading procedures. It works in coordination with the Water Facilities Department at tar loading and follows loading procedures.	(555) 629-1037	5533-5586
205004	YAKUP AYAZ	**By Products Foreman** Before and after the loading of benzene, equipment, etc. control and follow the loading procedures. It works in coordination with the Water Facilities Department at tar loading and follows loading procedures.	(532) 780-0634	5533-5586
206424	ADEM KARAÇAR	**By Products Foreman** Before and after the loading of benzene, equipment, etc. control and follow the loading procedures. It works in coordination with the Water Facilities Department at tar loading and follows loading procedures.	(543) 502-1906	5533-5586

REG.NO	NAME SURNAME	DUTY	MOBILE	TELEPHONE
200533	MEHMET TUĞGUM	**Chief Engineer** When radioactive material is detected, it is transferred to the port and performs the necessary procedures to transfer the radioactive material into the quarantine in accordance with the RADIOACTIVE MATERIAL INSPECTION PROCEDURE, and to send the disposal in coordination with TAEK.	(543) 845-9629	4010
205973	ABDULLAH BURAK YALÇIN	**Mühendis** When radioactive material is detected, it is transferred to the port and performs the necessary procedures to transfer the radioactive material into the quarantine in accordance with the RADIOACTIVE MATERIAL INSPECTION PROCEDURE, and to send the disposal in coordination with TAEK.	(536) 741-5460	5064
206927	ERDEM ÇAĞDAŞ HARPUT	**Mühendis** When radioactive material is detected, it is transferred to the port and performs the necessary procedures to transfer the radioactive material into the quarantine in accordance with the RADIOACTIVE MATERIAL INSPECTION PROCEDURE, and to send the disposal in coordination with TAEK.	(555) 551-0057	5118
206312	MEVLÜT SAYICI	**Vardiya Amiri** When radioactive material is detected, it is transferred to the port and performs the necessary procedures to transfer the radioactive material into the quarantine in accordance with the RADIOACTIVE MATERIAL INSPECTION PROCEDURE, and to send the disposal in coordination with TAEK.	(533) 035-4172	4210
201188	HÜSEYİN GÜRSAÇTI	**Worker** When radioactive material is detected, it is transferred to the port and performs the necessary procedures to transfer the radioactive material into the quarantine in accordance with the RADIOACTIVE MATERIAL INSPECTION PROCEDURE, and to send the disposal in coordination with TAEK.	(543) 447-0240	4210
204412	ŞEVKİ YILDIRIM	**Worker** When radioactive material is detected, it is transferred to the port and performs the necessary procedures to transfer the radioactive material into the quarantine in accordance with the RADIOACTIVE MATERIAL INSPECTION PROCEDURE, and to send the disposal in coordination with TAEK.	(506) 681-1961	4210
202307	BÜLENT ÇEZİK	**Worker** When radioactive material is detected, it is transferred to the port and performs the necessary procedures to transfer the radioactive material into the quarantine in accordance with the RADIOACTIVE MATERIAL INSPECTION PROCEDURE, and to send the disposal in coordination with TAEK.	(537) 294-0327	4210
202309	SALİH ALTAY	**Worker** When radioactive material is detected, it is transferred to the port and performs the necessary procedures to transfer the radioactive material into the quarantine in accordance with the RADIOACTIVE MATERIAL INSPECTION PROCEDURE, and to send the disposal in coordination with TAEK.	(542) 229-0077	4210
202347	HASAN DEMİR	**Worker** When radioactive material is detected, it is transferred to the port and performs the necessary procedures to transfer the radioactive material into the quarantine in accordance with the RADIOACTIVE MATERIAL INSPECTION PROCEDURE, and to send the disposal in coordination with TAEK.	(533) 475-1946	4210
204941	SALİH SERHAN MADEN	**Worker** When radioactive material is detected, it is transferred to the port and performs the necessary procedures to transfer the radioactive material into the quarantine in accordance with the RADIOACTIVE MATERIAL INSPECTION PROCEDURE, and to send the disposal in coordination with TAEK.	(532) 515-3968	4210
201236	MEHMET HAYRİ ÖZDEMİR	**Worker** When radioactive material is detected, it is transferred to the port and performs the necessary procedures to transfer the radioactive material into the quarantine in accordance with the RADIOACTIVE MATERIAL INSPECTION PROCEDURE, and to send the disposal in coordination with TAEK.	(532) 677-1429	4210

2.3. Responsibilities of the Ship Captain Are Given Below

(1) Ensures that equipment and devices of the ship running according to the Dangerous Goods transport procedures.

(2) Requests all required documents and information from coastal facility supercargo and make them to be ready during transportation. Provides a mutual agreement with respect to Ship-

Shore Check List for his ship approaching to the coastal facility.

(3) Provides full implementation of safety measures during loading, stacking, handling, transporting and unloading of Dangerous Goods and ensures necessary control and auditing. Gets an agreement on loading plan with coastal facility and loading activities are carried on according to this plan.

(4) Controls that Dangerous Goods taken by his ship is identified, classified, certificated and declared and loaded as standardized according to the IMSBC and IBC Code.

(5) Provides training courses for all ship personnel including deck watch-keeper officer about the risk of Dangerous Goods during transportation, loading/unloading activities, safety measures, emergency response measures and other similar issues.

(6) Provides employment of well-qualified and trained personnel who have taken necessary occupational safety measures during loading, transporting, unloading and handling of Dangerous Goods. During dangerous load transfer process, provides deck and machine safety guard. In this context organizes personnel activities according to ship-shore control list based on the agreement committed with coastal facility.

(7) Ship captain can't go and anchor beyond the allocated area and approach any pier without the permission of the Port authority. If anchorage to be made, gives the slack chain by taking into account the weather conditions and vessel size.

(8) During navigation, maneuver, anchoring, approaching and sailing from the shore performs all shipping rules and precautions to provide a safety transportation of Dangerous Goods. If necessary, put into effect of emergency responses for dangerous cargo. In this content, coordinates the movements of his/her ship considering Ship Captain Letter File given by Coastal Facility Operator.

(9) Ensures safe entrance and exit between ship and gangway by using Gangway Operation Instructions determined by ISDEMIR.

(10) Ship captain informs the staff about emergency measure and response methods, safety procedures and applications related to Dangerous Goods. Informs watch-keeper officers about the possibility of dangerous cargo accidents and determines smoking banned and free zones and makes the rules to be obliged. Provides a regular measurement of safety measurements such as gas measurement etc. considering risks caused from Dangerous Goods.

(11) Updates and keeps the lists of all cargo including loaded and unloaded dangerous cargo and presents it to the authorities.

(12) Takes necessary safety measures for Dangerous Goods that is unsafe, unstandardized and

pose risk to life and environment and informs ISDEMIR Management Board and Port Authority.

(13) Informs ISDEMIR Authority and Port Presidency about Dangerous Goods accidents occurred in the ship.

(14) Required documents that should place in the ship are:

As regards revised SOLAS 1974 Chapter VII/4.2 and MARPOL 73/78 Annex III Rule 4.2, a special list of names and locations of dangerous goods and sea pollutants, Manifesto, Stowage Plan for every ship carrying dangerous goods and sea pollutants must be available. This special list and Manifesto are based on required documents and certificates listed in IMDG Code. Furthermore, stowage positions and total amount of dangerous goods and sea pollutants must be included. A detailed stowage plan including all of dangerous goods and sea pollutants together with their classes can be used instead of a special list or Manifesto. A copy of these documents and certificates must be obtained for Port Authority before movement.

Emergency response information:

Considering outgoing of dangerous goods, required information and documents in order to use them as emergency response actions in case of any type of accident or incidents related to dangerous goods during transport must be kept ready and always be available. These information and documents must be kept far from dangerous goods' packages and in case of any accident or incidents, they must be easily accessible. In this context, a special list specified above, Manifesto or Medical First Aid Guide (MFAG) including appropriate inputs with regard to dangerous goods declaration and dangerous goods and Emergency Response Procedures for Ships Carrying Dangerous Goods (EmS) together with transport certificate must be available.

(15) Provides necessary support and cooperation at the time of required controls operated by official authorities.

3.RULES TO BE COMPLIED AND MEASURES TO BE TAKEN BY COASTAL FACILITY OPERATOR

Coastal facility operators having Dangerous Goods Compliance Certificate shall take the following measures.

a. Dangerous Goods entering to the ISDEMIR Harbor is directly transferred to the storage tanks located at the ISDEMIR terminal by pipelines and stored without waiting on the pier or wharf. Incoming dangerous goods are loaded into ships in the port following the rules of IMDG Code, IMSBC Code.

b. Provides protective clothes to be worn by coastal facility personnel, ship crew and other responsible bodies for handling of Dangerous Goods, ship staff and other authorized people

according to the physical and chemical properties of Dangerous Goods during loading, unloading and storage. In this context, organizes the activities within the framework of ISDEMIR KKD usage map given in App-13.

c. Provides the people fighting with fire to be equipped with fire extinguishers in the site of handling area of Dangerous Goods and makes all first aid equipment and fire extinguishers to be ready for use. In this context, all activities mentioned shall be organized according to ISDEMIR ADMP (Emergency Response Plan).

d. Provides emergency evacuation from the coastal facility of ships and boats based on ISKENDERUN Port Ship Evacuation Plan.

e. Provides all fire, safety and emergency measures to be taken.

f. Arranges control of the provisions of this Article is performed by the Port Authority and if any discrepancy is determined, handling operations are stopped, discrepancy is eliminated.

g. It is not allowed to work and enter to handling operations area personnel not having training and certification during handling of Dangerous Goods and to enter in that area according to the regulation of "Education and Authorization" within the framework of dated and published on 22.01.2016 and numbered as 29601 Official Gazette legislation about "International Code Regarding Carrying Dangerous Goods by Sea".

4 CLASSIFICATION, TRANSPORTATION, LOADING/UNLOADING, HANDLING, DECOMPOSITION AND STORAGE OF DANGEROUS GOODS

4.1.Classification of the Dangerous Goods

As per the regulation in force since 10 April 2017, Dangerous Goods Guide (DGG) must contain relevant information about the goods actually handled in port facility in accordance with Annex-1(1). The dangerous goods, which are not handled in the facility, are not stated in this DGG. After taking into account the relevant instruction of the regulation, we may list the dangerous good handled in İsdemir Port as follows:

- IBC Code – COAL TAR (UN 1999 - Tars, Liquid)
- IBC Code - BENZOL (UN 1114 - Crude Benzene Flammable Liquid)
- IMSBC Code - FERROUS METAL BORINGS, CUTTINGS (UN - 2793)
- IMSBC Code – FERROSILICON (UN 1408)

Under the light of above given facts, handled dangerous liquid goods (benzene and coal tar) in the facility were carefully analyzed and it has been revealed that both goods are marked in Chapter 17 (hazards row) of IBC Code as "safety-S". Therefore, both liquid dangerous

goods are not allowed to transport by the means of tank truck from ship to storage tanks or vice versa.

As far as dangerous bulk cargoes are concerned, relevant regulation pick up attention about the contact of dangerous good by water, especially those are liable emitting gases when contact with water exists. It has been underlined that such bulk goods are not allowed to discharge under rain. Ferrosilicon, which is handled in İsdemir Port, is in this class and as a result of discharging ferrosilicon is not allowed to discharge under rain.

4.2. Package of the Dangerous Goods

Packaging Procedures

Packing operations are not carried out in the ISDEMIR Port.

4.3. Placards, plates, brands and labels related to Dangerous Goods

Besides existing labels on the tanks which Dangerous Goods reaching to the port is transferred to, plates, brands and labels shall be done as specified in IMDG Code Section 5.2 and 5.3 as shown below:

- **Class 3 Flammable Liquids**

- **Class 4 Flammable Solids**

Class 4.2

- **Marine Pollutants**

4.4 Signs of Dangerous Goods and Packaging Groups

Packed dangerous goods are not handled in İsdemir Port

4.5. Decomposition tables of Dangerous Goods on ship and port according to the classification

Since ships and ISDEMIR Coastal Facility handle liquid bulk dangerous goods, decomposition tables aren't used.

4.6. Decomposition distances of Dangerous Goods on the storehouse and decomposition definitions

Since ships and ISDEMIR Coastal Facility handle liquid bulk dangerous goods, neither decomposition tables nor decomposition terms are used.

4.7. Dangerous Load Certification

a. Transport Certificate
b. Requested documents from ships.
c. Emergency response information. Put into effect within the framework ADMP

5. MANUAL OF DANGEROUS CARGOES HANDLED AT THE COASTAL FACILITY

It is given in App-10.

6. OPERATIONAL CONDITIONS

6.1. Procedures for berthing, connecting, loading/unloading, porting and anchoring of the ships carrying Dangerous Goods safely both night and day

a. Entrance to the Port Area:

(1) The captain of a ship carrying dangerous cargo should do the followings before entering the

Port area:

(a) The captain shall prepare himself and his ship staff about legal and administrative obligations related to ships carrying Dangerous Goods and handling of Dangerous Goods at the port area.

(b) The captain shall check his ship in terms of machine, equipment and devices.

(c) The captain shall check dangerous cargo and its content in case of a damage or leakage.

(d) The captain informs related Port Authority about non-standardized and deficient equipment and device in the ship, damage or leakage from a dangerous cargo and prevention system errors posing risk to property, environment and life.

(2) The captain of a ship whose ship carries dangerous cargo shall fulfill the followings while entering to the port facility unless indicated otherwise by the Port Authority:

(a) The captain shall keep the related communications with Port Authorities by VHF communications facilities.

(b) Shows a BRAVO condition at daytime and a red light visible from all directions at night times.

(3) Safety shifts

(a) The captain shall organize an appropriate watching shift during entrance/exit to the port and safety shifts for deck and machine during handling process.

(b) The captain should make safety monitoring shifts arrangements by considering the amount of stored Dangerous Goods and all details.

(4) Connecting to the gangway

The captain shall show the appropriate dangerous signals as long as in the gangway unless indicated otherwise by the Port Presidency.

During his time in the port;

(a) For emergency cases, shall get a drag rope located at the bow and poop of the ship which can be easily hauled in. One side of the drag rope shall be extended until the water level and shall be ready to use at any time of danger.

(b) Anchoring equipment shall be ready for any emergency cases.

(5) The captain shall keep ready ship machine decisively for the ship safety and protection of ship ballast and shall not let any smoke or gas release out from boiler pipe unless port authorities permitted.

Ship captain shall provide safe entrance/exit between ship and coast.

(6) Emergency procedures

The captain shall keep himself and watch keeping officers and crew staff ready to implement the emergency procedures properly as long as he is on the ship deck or gangway.

The captain shall consider type and content of Dangerous Goods and special cases and take into account required arrangements for safe and quick escape.

The captain shall provide emergency procedures in the ship to control incidents which dangerous cargo involved in and provide all personnel and officers to be trained about emergency procedures implementation.

(7) Emergency information procedures

Captain of a ship carrying dangerous cargo shall keep the following information in the same place with information on the SOLAS Agreement specified in the paragraph II-2/15.2.4.2.

(a) A list of Dangerous Goods transport by the ship

(b) A list of Dangerous Goods unloaded at port area

The captain shall provide necessary safety procedures easily accessible in addition to emergency response procedures.

EMS Guide used in conjunction with the transport document and First Aid Guide (MFAG) used for incidents which Dangerous Goods involved in and safety information sheets are included.

The captain must be informed about passengers/visitors and crew existing in the ship by watcher officer and the number of all people shall be provided (This will make it easy to know the exact number of people in case of an accident or emergency condition).

(8) Fire Precautions

The captain of the ship:

(a) Make sure about the identification of sites where smoking is prohibited.

(b) Provides to be hanging ban signals with explanation of figures about where smoking is prohibited on the important places to be clear and non-smoking areas to be non-dangerous sites (By also considering upon carried dangerous cargo is explosive and fire risky, empty and containing residual wastes tanks considered to be risky in terms of flammable vapor and dangerous risk).

(c) Make sure that equipment and devices used for controlling explosion in a site do not cause explosive or combustive conditions.

d) Make sure that equipment or tools used for taking samples or measures from an explosive possibility area or free space are safe and portable electrical devices that can be used in flammable atmospheres.

Ship captain also makes sure that electrical equipment shall not be used accidentally and unconsciously in the explosive sites.

Ship captain provides fire station tested appropriately for dangerous cargo and obliges personnel to participate in training and practices about firefighting.

b. Environmental Protection

The captain of the ship carrying dangerous cargo must be sure that all necessary precaution measures are taken to prevent releasing dangerous cargo to the environment.

The captain of the ship shall provide all scupper holes to be fully closed and make disposal and absorbing material is ready to use by considering safety of personnel and the ship. Provides all necessary measures to be taken for cleaning of spillage material to the area. It is very important to be used correct and safe emergency measures by qualified and trained personnel about Dangerous Goods risk management to prevent environmental accident caused by dangerous cargo. Personnel shall be regularly trained for correct and safe use of related equipment.

c. Reporting of the Accidents

The captain shall provide to stop operation if an accident posing a risk to ship and crew, other ship or port or property or environment is occurred due to handling until necessary precaution measures are taken for his ship.

The captain shall remind to the personnel that accidents possible to occur during the handling operations must be reported operation responsible and port authorities.

It is necessary to define the accident precisely and accurately to the current emergency response center as soon as possible to get immediate and effective reaction, reduced damage and, treatment of injured personnel.

d. Coastal Facility

(1) Connecting to the gangway

Coastal facility operator:

(a) Adequate and safe anchoring ability (depth and adequate safe site etc.)
(b) Safe transportation shall be provided between ship and coastal site.

(2) Control – Auditing

When dangerous goods cargo is opened by authorized personnel for the control the coastal facility operator provides that the personnel assigned for checking content of Dangerous Goods cargo is aware of possible hazard and danger.

(3) Classification, packaging, signing, labeling, sheeting and certification

The coastal facility operator must be sure that when dangerous cargo enters into his area, is to be certificated and approved by cargo personnel in accordance with national and international requirements according to transport code.

(4) Safe handling and separation

The coastal facility operator assigns at least one authorized personnel having qualified information about national and international requirements for carrying and handling of dangerous cargo and separation distances of inappropriate dangerous cargos.

(5) Emergency Procedures

Coastal facility operator must ensure the appropriate implementation of emergency regulations and present to the authorized people. These regulations should include followings:

(a) Determining the appropriate emergency alarm operation location (Emergency intervention activities will be managed from that operation center/unit),
(b) Informing about accident or emergency condition to the emergency services in and out of the facility first orally and also according to App-14,
(c) Informing about accident or emergency condition to the port authority or land or sea users of the port,
(d) Providing emergency response equipments listed in App-12 according to hazard classification of handled dangerous cargo,
(e) Making arrangements and coordination for ship leaving the port in case of an emergency within the rules given in App-17.
(f) Making arrangements for organizing entrance and exit of the ship to port facility.

(6) Emergency Information

The coastal facility operator shall prepare a list including amount of dangerous cargo in the tanks and name of the shipping, secondary risk-if there is-, packaging group and current emergency services list.

The coastal facility operator shall provide to be hanging of emergency response procedures and emergency telephone numbers of port or gangway on the handling and transportation tanks or operation areas or some other visible sites.

The coastal facility operator shall mark clearly fire and leakage/bulk fighting equipments and stations, and provide to be hanging appropriate places to attract the attention of the concerning persons.

Coastal facility operators shall inform the captain of the ship about the emergency procedures and services at the pier.

(7) Fire Precautions

Coastal facility operator:

(a) Provides emergency services to get access to the ship from anywhere of the pier or a ship is at anchor at any time,

(b) Provides installing audible and visible alarm systems for emergency cases at port sites and in other way installing a rapid communication with emergency services,

(c) Provides the appropriate design of port to get the required water for protection from fire compatible with ship equipment within the ship coastal contacts regulation according to the international standards for ships weight of 500 tones and heavier without considering the year of construction,

(d) Provides all handling sites where dangerous cargo is handled is clean and dry,

(e) Informs the captain of the ship about the nearest emergency services to be called, before handling the dangerous cargo,

(f) Ensures designing of lighting system and electrical equipped with safe material against flammable and explosive environment at pier where dangerous cargo is located in.

Coastal facility operator:

(a) Shall determine smoking banned areas.

(b) Provides to be hanging ban signals with explanation of figures about where smoking is prohibited on the important places to be clear and non-smoking areas to be non-dangerous sites (By considering carried dangerous cargo is explosive and fire risky, empty and containing residual wastes tanks considered to be risky in terms of flammable vapour and dangerous risk).

(c) Make sure that equipment and devices used for controlling explosion in a site do not cause explosive or combustive conditions.

(d) Make sure that equipment or tools used for taking samples or measures from an explosive possibility area or free space are safe and portable electrical devices that can be used in flammable atmospheres. Also make sure that electrical equipment shall not be used accidentally and unconsciously in the explosive sites.

(8) Firefighting

Coastal facility operator must be sure that the site where dangerous cargo is handler or transported is equipped with fire station tested appropriately for dangerous cargo according to the legal regulation of the site. Coastal facility operator also provides personnel to be trained and practiced about fire protection.

(9) Environmental Protection Measures

Coastal facility operator makes dangerous cargo to be handled according to regulatory authority in the site.

Coastal facility operator provides any damaged pipeline or tank to be repaired according to regulatory authorities and repackaged the dangerous cargo appropriately. He also makes it impossible to transport or handle unless a complete safe and appropriate condition is achieved.

Provides all necessary measures to be taken for cleaning of bulk material to the area. It is very important to be used correct and safe emergency measures by qualified and trained personnel about Dangerous Goods risk management to prevent environmental accident caused by dangerous cargo. Personnel shall be regularly trained for correct and safe use of related equipment.

Spare large scaled drams, absorbent or cleaning equipment, liquid preventive equipment shall be made ready for use (release inhibitors, absorbents and oil barriers, etc.) and relevant staff must be regularly trained about using the equipment correct and safe.

E. General considerations for transportation of Bulk Liquid Dangerous Goods

(1) The following documentation should be considered:

ICS/OCIMF/IAPH: International Safety Guide for Oil Tankers and Terminals (ISGOTT) - Fifth Edition 2006

OCIMF: Oil tankers, combined carriers, commercial tankers, Chemical tankers and Gas Tankers, Barge, Trailers used for barges Vessel Control Question list for vessels carrying packages (VIQ) - Third Edition 2005

(2) International Certificates

International Oil Pollution Prevention Certificate (IOPP Certificate)

(3) Operational and Emergency Purpose Information

The captain of the ship and Coastal Facility Operator should have the following information for each dangerous cargo transported or handled within their area of responsibility.

(a) Production name of the cargo, if exists UN number, taking environmental precautions for cargo and definition of required physical and chemical properties for handling (including reactivity),
(b) Cargo transfer, slop transfer, inert gases, intake of ballast and required procedures for ballast evacuation,
(c) The special equipment needed for the safe handling of some cargos,
(d) Emergency procedures for the followings:
i. Necessary precautions during bulk or leakage
ii. Necessary precautions during accidents
iii. Firefighting precautions and firefighting media tools

(6) Ships Carrying Bulk Liquid Dangerous Cargo

(a) Compliance

i. Co-operation shall be provided between the captain of the ship, Port President and Coastal Facility Operator to determine the most suitable site for handling of bulk dangerous cargo reacting with handling cargos or other transported physical or chemical dangerous cargos. To prevent this kind of dangerous condition all kinds of measures shall be taken such as separate ventilation, selection of correct tanks, pumping and pipe line system.

ii. The captain of the ship shall avoid contacting bulk non-liquid dangerous cargo

with leakage, chemical reaction or any other tank, pipe, valve or other equipment. The captain of the ship shall also be aware that corrosive agents in the ventilation pipes of the ships and solidification of goods reacting with water cause dangerous condition.

(b) Handling Process

The captain of the ship shall provide the followings:

i. Prevent flammable and / or toxic vapors entering to control or a service station, empty places or engine room.
ii. All external cargo spaces excluding ventilation pipe that is designed to capture excessive pressure and vacuum shall be closed during handling of flammable and /or toxic cargos or ballasting of that types of cargos except permission of Port President and Port Facility Operator.
iii. Any tools or equipment used for taking sample shall not cause ignition or fire.

Unless operational conditions requires, the port shall be closed by considering operational requirement if flammable cargos disappear. If it is required to be kept open by taking into consideration design facts, open parts shall be protected with flame screen for a short time during observation, sampling and diminishing process. Flame screen shall be kept clean and in good condition.

The captain of the ship shall stop the handling process and doesn't give permission to re-start unless necessary precaution measures approved by Port President and Coastal Facility Operator taken in case of an accident during handling of liquid bulk dangerous contamination possibility, decontamination of ballast water with liquid bulk dangerous goods, a damage to cargo pumping system and connection equipment or requirement to an intervention to liquid bulk dangerous goods.

(c) Gas - Free, Tank Cleaning and Inerting

The captain of a ship carrying dangerous cargo having liquid spilt possibility must provide cleaning procedures such as gas-free, tank cleaning (including crude oil washing) or cleaning with inert gases according to ship operational manual. Such operational manuals must be compatible with the ship rules and should comply with the recommendations of the IMO and other organizations. Ships operational manuals must be approved by the administration. Principle rules shall focus on the suffocating system and crude oil washing system.

Gas free, tank cleaning and suffocating operation should not be performed without permission of the Port President and Coastal Facility Operator.

(d) Prevention of the Spillage

The captain of the ship shall keep closed all of the scupper holes except water drainage holes and provide regular control of this scupper holes during handling process. When corrosive liquids or refrigerating gasses handled with the permission of Port President scupper holds can be open, if adequate support water is ready in the nearby manifolds. However, ship oil pollution emergency plan for toxic liquids and marine pollution emergency plan / MARPOL 73/78 Annex I and Annex II requirements should always be taken into consideration.

6.2. Procedures for additional measures to be taken according to the seasonal changes for loading/unloading and transshipment operations of Dangerous Goods

a. Dangerous Goods are generally affected by high temperatures (in the summer) rain, strong wind (available all year) depending on the seasonal changes. The port facility is rarely exposed to snow and ice effects due to its geographical condition.
b. Loading/unloading operations are interrupted considering personnel safety in rainy weather.
c. Loading/unloading operations are interrupted in stormy, strong windy days and in case of streak of lighting.
d. Port engines and transport vehicles are not permitted to work in snowy and iced days. Once the environment is safe, vehicles start to transfer operations immediately.
e. Related procedures are given in Ship-Coast Control List.

6.3. Procedures for keeping away Flammable, combustible and explosive materials from sparkling operations and not to work with sparkling equipment and tools during handling, stacking and storage of Dangerous Goods.

All of the hot works performed in port site or ships are subjected to permit. All of the subcontractors and ship staff at the ISDEMIR Port site are informed about demanding the set-up providing insulation and safety, information plates, a restricted working area, evacuation plan and permission for working at high levels. If it is inevitable to work at sites having high dangerous risk, before starting to work cargos containing Dangerous Goods shall be transferred to a safe place. Smoking is prohibited at sites where Dangerous Goods exists. Permissions in this context will be taken within the framework of ISDEMIR WORK PERMIT PROCEDURES Document.

6.4. Procedures for fumigation, gas metering and degasification process

No fumigation, gas measurement and degasification process is allowed at ISDEMIR Port.

6.5. Operation of Gas Detection and Smoke Detection System to monitor the level, temperature and pressure changes of filling tank

Operation of Gas Detection and Smoke Detection Systems which established for monitoring level, temperature and pressure changes of filling tanks in ISDEMIR Port will be performed as specified in 'Operation of Gas Detection and Smoke Detection System Port Operating Instructions'.

6.6. Safe Handling of Dangerous Solid Bulk Cargo Procedure

DISTRIBUTION:

This procedure; The personnel who are responsible for carrying out the duty and operations of the dangerous solid bulk cargoes and the personnel who will carry out this procedure are distributed to the unit manager and the unit managers.

1. PURPOSE: This procedure; It aims to explain the work and operations of the relevant personnel during the discharge and discharge operations of the dangerous solid bulk cargoes under ADR.

2. SCOPE: This procedure; It covers all personnel who have duties and responsibilities in the process of discharge evacuation work and operations of dangerous solid bulk cargoes.

3. REFERENCES:

• International Sea Freight Solid Bulk Cargo Code (IMSBC)

• Regulation on the Transportation of Dangerous Goods by Sea

4. DEFINITIONS:

Hazardous Solid Bulk Loads: Containers, granules or coarse particles, except liquid or gas, which are subject to the IMDG Code and are generally of a uniform composition and without the need for any additional coarse / casing refers to any kind of load loaded on barriers.

IMDG Code: International Sea Freight Dangerous Goods Code

IMSBC Code: International Sea Freight Solid Bulk Loads Code

Terminal Operator: any organization or person to whom the owner or owner of a terminal has delegated the responsibility for the loading or unloading operations carried out at the terminal for a specific bulk carrier,

Terminal Representative: Any person who has the authority to control the overall responsibility for the preparation, execution and completion of the loading or unloading operations for a particular bulk carrier, as defined by the terminal operator,

5. RESPONSIBILITIES:
Unit supervisor: Planning the discharge and discharge processes of dangerous solid bulk cargoes in accordance with the legislation.
Unit Supervisor: To monitor and control the execution of hazardous solid bulk cargoes in accordance with legal regulations.
Unit Personnel: To perform the discharge and discharge processes of dangerous solid bulk cargoes in accordance with legal regulations.

6. APPLICATION:

In order to ensure safe loading and unloading of dangerous solid bulk cargoes, it is of great importance that the captain and terminal representative perform their duties and responsibilities in accordance with the legislation as well as cooperate. During the loading and unloading of dangerous solid bulk cargoes, safety precautions are taken when the following points are fulfilled.

a. The captain of the dangerous solid bulk carrier must fulfill the following duties and responsibilities;

- Ensure safe loading and unloading of dangerous bulk cargo under control.
- It must notify the terminal of the information specified in the legislation before the ship's expected arrival time.
- Prior to shipment of any dangerous solid bulk cargo, it must have received cargo information in accordance with Rule 2.2 of Part VI of the 1974 SOLAS Convention and a dangerous bulk density if required in accordance with the form in Annex 5 to the BLU Code.
- Carry out the tasks before and during the dangerous bulk cargo handling or unloading operations.

b. The Terminal Representative must fulfill the following duties and responsibilities;

- After receiving the first notification of the expected arrival time of the ship,
- The master must provide the information specified in the legislation.
- Provide the captain with the information in the freight declaration as soon as possible.
- Any deficiencies that may be found on the dangerous bulk carrier and that may endanger the safe loading or unloading of dangerous solid bulk cargoes must be reported to the master and the relevant inspection unit of the Administration without delay.
- Carry out the tasks before and during the loading or unloading operations.

c. Captains and terminal representatives of dangerous bulk carriers should cooperate with each other in accordance with the procedures below.

- The captain and terminal representative agree on the loading or unloading plan in accordance with the provisions of Rule 7.3 of Section VI of the 1974 SOLAS Convention before the collection or removal of solid bulk cargoes. The loading or unloading plan is prepared in accordance with Annex 2 attached to the BLU Code and includes the IMO number of the relevant bulk carrier. The captain and terminal representative shall confirm the agreed plan. The information in the freight statement should be given to the captain as soon as possible.

- Any changes to the plan will be prepared and approved by the parties in the form of a revised plan if they are capable of affecting the safety of the ship or the crew.

- The agreed loading or unloading plan and any subsequent amendments shall be retained by the ship and the terminal for a period of six months in order to be examined by the relevant authorities, if necessary.

- Prior to loading or unloading, the ship / shore safety checklist shall be completed and signed jointly by the master and terminal representative in accordance with the provisions of Annex 4 to the BLU Code.

- An effective communication scheme is established between the ship and the terminal during the loading or unloading process and is continued until the loading or unloading is completed. The request of the captain or terminal representative to stop loading or unloading operations is immediately followed.

- The captain and terminal representative shall carry out the loading or unloading operations in accordance with the agreed plan. The terminal representative is responsible for loading or unloading the amount and speed of loading or unloading specified in the plan and loading or unloading of solid bulk cargo in terms of warehouse order. Unless there is a written agreement by the Captain and the terminal representative, upon completion of loading or unloading, the captain and terminal representative shall prepare and sign a work certificate that the loading or unloading operation has been carried out in accordance with the loading or unloading plan, including any agreed change. In the case of unloading, the document contains a register in which the cargo holds are emptied and cleaned according to the captain's request and indicates any damage and repairs to the ship.

d. If damage occurs in the structure or equipment of the ship during loading or unloading, the following provisions shall apply;

- The terminal representative reports damage to the captain and the damage is repaired if necessary.
- If the damage is capable of weakening the vessel's structural integrity or waterproofness or the basic technical systems of the vessel, the terminal representative and / or the captain shall inform the administration of the flag state or an organization acting on its behalf and authorized by it.
- The decision shall be made immediately to repair or deferment of the repair shall be given by the Administration as the port state control authority. In this respect, the administration shall take into account the views of the administration of the flag state or of the organization and the ship captain authorized by him and acting on his behalf. If repair is deemed necessary immediately, this repair shall be carried out in such a way that the vessel can be accepted by the master and the Administration without leaving the port.

- The Contracting Entity may make use of the service of an organization authorized to review the damage and give an opinion on postponement or repair of the repair before giving the decision referred to in paragraph (c) of this Article.

e. For all bulk cargo ships that have come to the terminal to receive or unload dangerous cargo;

- In a design that will allow the loading, stacking, balancing and unloading of the solid bulk cargo in a satisfactory manner and in the presence of large enough cargo holds and hatches.
- Having cargo hold-up identification numbers used in the loading or unloading plan and the location, size and color of these numbers clearly visible and recognizable by the operator of the terminal loading or unloading equipment,
- The use of load hatchways, hatch opening and closing systems and safety devices in working condition and only for the intended purpose,
- If installed, the indicator lights of the inclination (indicating that the ship is laid on the berth or dock) are tested and operational before loading or unloading,
- If an approved loading equipment is required, this equipment must be certified and operational to perform stress calculations during loading or unloading,
- Ship handling and auxiliary machinery in operation,
- The deck equipment for mooring and mooring operations must be in good working order.

f. In order to ensure operational compliance in the reception and unloading of dangerous solid bulk cargoes;

- The safety of the bulk cargo ships (water depth in the berth, the maximum size of the berth, anchoring devices, fender assembly, safe access and any possible obstacles in loading or unloading operations) to be taken to a terminal for receiving or unloading solid cargo ,
- The terminal loading and unloading equipment shall be certified in accordance with the relevant Regulations and standards and shall be operated only by qualified personnel (if necessary) with appropriate qualifications, in good condition,
- the training of terminal personnel in all matters relating to the safe loading and unloading of bulk carriers in proportion to their responsibilities, including the general hazards of the loading and unloading of solid bulk cargo and the adverse effects of improper loading and unloading operations on the safety of the ship. designing,
- Equipping the terminal personnel, who are involved in loading and unloading operations, with personal protective equipment and resting them enough to avoid accidents due to fatigue,

  It is mandatory.

g. The information given by the ship's captain to the terminal;

- The expected arrival time of the ship at the port as early as possible (this information is updated if necessary),
- Name of the ship, call sign, IMO number, flag, registration port,
- Loading or unloading plan indicating the amount of the load, the place of loading from the hatches, loading or unloading order and the amount to be loaded at each stage or to be emptied at each stage,
- Arrival and proposed departure drafts,

- The time required to take ballast or ballast,
- The full length of the ship, its maximum width, and the length of the load area from the front edge of the front hatch mouth to the rear edge of the hatch mouth to the rear of the front hatch,
- The distance from the water line to the first hatch mouth to be loaded or unloaded, and the distance from the side of the ship to the hatch mouth,
- The location of the pier at the ship's living quarters,
- Air draft, (free-head height)
- If so, the details and capacities of the cargo handling equipment of the ship,
- Number and type of mooring ropes,
- Special requirements such as continuous measurement or balancing of the water content of the load,
- Details of any compulsory repair that may delay the berthing, loading or unloading or delay the movement of the ship after loading or unloading is completed,
- It should include other information about the ship that the terminal may request.

h. Before and During Loading or Unloading The ship captain performs the following tasks;

- The charge or unloading process and the ballast water take-up or discharge operation are under the control of the responsible officer on board, In Monitoring of the load and ballast water system during the loading or unloading process so that the structure of the ship is not subject to excessive stress,

- If the ship is unstable or needs to have an inclination in terms of operation, this should be kept as small as possible,

- Ensure that the ship is safely attached to the pier, taking into account local weather and weather forecasts,

- Having enough crew and crew on board to take care of the adjustment of the mooring ropes or any other situation, taking into account the need of the crew for adequate periods of rest to avoid fatigue,

- Notifying the terminal representative of the load balancing requirements (load balancing shall be carried out in accordance with the IMO procedures in the Safe Application Code for Solid Bulk Loads),

- Notifying the terminal representative of any deviation from the ballast take-up or take-off plan or any deviation from the ballasting-off-and-take-out plan for the ship's pick-up or pick-up and unloading or unloading rates;

- If ballast water is disposed at the appropriate rate in accordance with the agreed loading plan and therefore the berth or nearby boats are not filled with water (if the ship is not

able to discharge the ballast water completely before the balancing phase in the loading process, the captain will agree with the terminal representative on the time that the loading can be suspended and the duration of the suspensions.)

- In the event of a change in the rain or weather condition, if there is a danger due to the nature of the cargo, then it has reached agreement with the terminal representative on the transactions to be carried out,
- Any hot work on the ship or near the ship when the ship is at the docks, but only with the permission of the terminal representative and in accordance with the requirements of the competent authority,
- Close supervision of the vessel during the loading or unloading process and its final stages,
- It may cause damage to the loading or unloading process, create a hazardous situation or, if this is possible, warn the terminal representative immediately,
- To notify the terminal representative when the final balancing of the vessel should commence, in order to allow the conveyor belt system to be evacuated,
- In order to avoid the bending of the structure of the ship, the unloading process on the port side in the same warehouse as the unloading process on the port side is compatible with each other,
- While the ballast is placed in one or more tanks, taking measures to take into account the possibility of igniting vapor from the barns and allowing any hot work to be carried out or adjacent to these barns,
- It should provide.

i. The information given by the terminal officer to the ship's captain is as follows;

- The name of the berth where the loading or unloading will take place, the estimated times / times for completion of the berthing and loading or unloading,
- Completion of the loading or unloading speed of the terminal, including the number of heads or buckets of the loading or unloading equipment to be used, as well as the completion of shedding from the vessel's hatch each time during the unloading process, or the estimate required for each stage of the unloading process time
- The captain should know about the docking station or jetty, including the location of fixed and mobile obstacles, fenders, scaffolding fathers and ship mooring equipment,
- The minimum water depth along the berth and approach and take-off channels,
- The density of the water at the quay measured using the Draft Survey Hydrometer, (The maximum distance between the top of the load hatch covers or sides and the water line, if necessary, in terms of loading or unloading;
- Gangway assembly,
- Which side of the ship will be berthed,
- The maximum permissible speed to approach the pier, the presence, type and pulling force of tugboats,
- If it is not possible to take the loading order and load in any order to match the ship,
- If the cargo to be placed on the ship has properties which may create danger when it comes into contact with other loads or residues in the ship, Boşaltma Providing prior information on proposed loading or unloading operations or changes to existing plans for loading / unloading,

- The presence or absence of any situation where the loading or unloading equipment of the terminal is fixed or restricts its movement,
- Required mooring ropes,
- Warnings of unusual fastening devices,
- Restrictions on ballast receiving or printing,
- The maximum permissible draft permitted by the competent authority,
- Other matters to be requested by the master regarding the terminal,

j. Before and During Load Receiving or Unloading Operations The Terminal Representative must perform the following tasks.

- Notifies the names of the terminal personnel or the installer agency and the contact procedures to the captain who will be in charge of loading or unloading operations.
- Takes all precautions to prevent the loading and unloading equipment from damaging the ship and notifies the captain if damage occurs.
- If the vessel is unstable or has to be tilted in terms of operation, this will be kept as short as possible.
- In order to avoid bending of the ship, it ensures that the discharge on the side of the starboard is compatible with the discharge process on the scaffold side.
- In the case of high density loads or large amounts of cargo received at each hatch, especially if the free fall from the high is allowed, it warns the captain that high impact weights may be present on certain points in the structure of the ship until the inner bottom surface of the cargo warehouse is completely covered with load and special measures are taken.
- Provides the consensus between the captain and the terminal representative at all and all stages of loading and unloading operations, and any change in the agreed loading rate and informs the captain when each pouring of the loaded weight is completed.
- Keeps a record of the weight and condition of the loaded or unloaded cargo and ensures that the weights in the warehouses do not deviate from the agreed loading or unloading plan.
- Ensures that the load is balanced in accordance with the requirements of the container during loading or unloading.
- The amount of load required to reach the trim and trim of the ship shall also include the amount of load remaining on the conveyor belt systems of the terminal after the loading is completed. To this end, the captain informs the captain of the nominal tonnage in the conveyor belt system and the requirements for clearing the conveyor belt system upon completion of the loading.
- If, in the event of unloading, it is desired to increase or decrease the number of discharge heads (scoops) used, it shall inform the captain that this and the discharge operation from each warehouse has been completed.
- When the ship is in the anchorage area, any hot work on the ship or near the ship shall be carried out only in accordance with the permission of the master and in accordance with the requirements of the competent authority.

The Safety Data Sheets of each of the dangerous solid bulk cargoes to be loaded and discharged at the coastal facility shall be examined and shall be explained and explained in writing to the personnel involved in the evacuation process by preparing the Safety Estimation Instructions for each substance.

FLOW CHART (1)

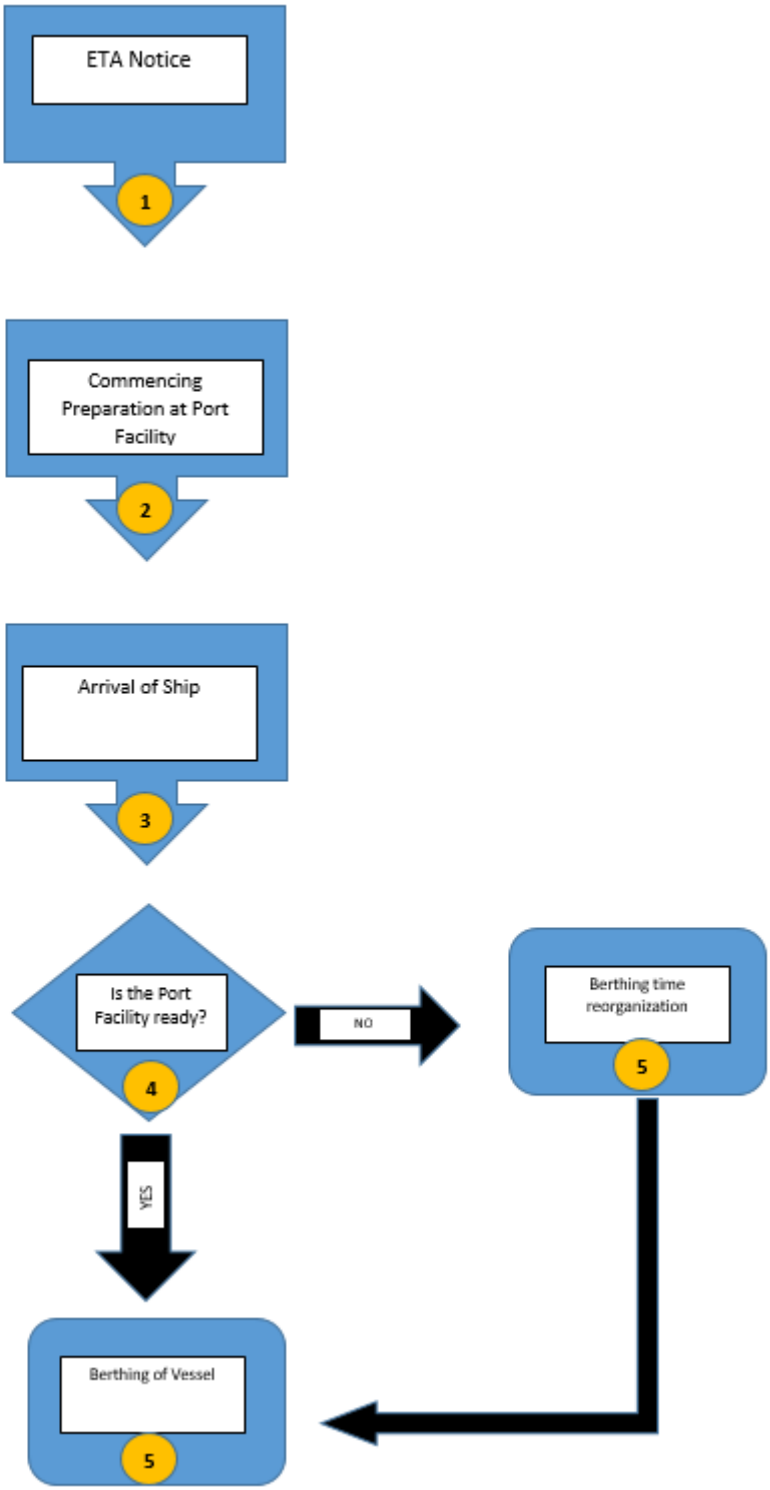
ETA Notice
1
Commencing Preparation at Port Facility
2
Arrival of Ship
3
Is the Port Facility ready?
4
NO
Berthing time reorganization
5
YES
Berthing of Vessel
5

FLOW CHART (2)

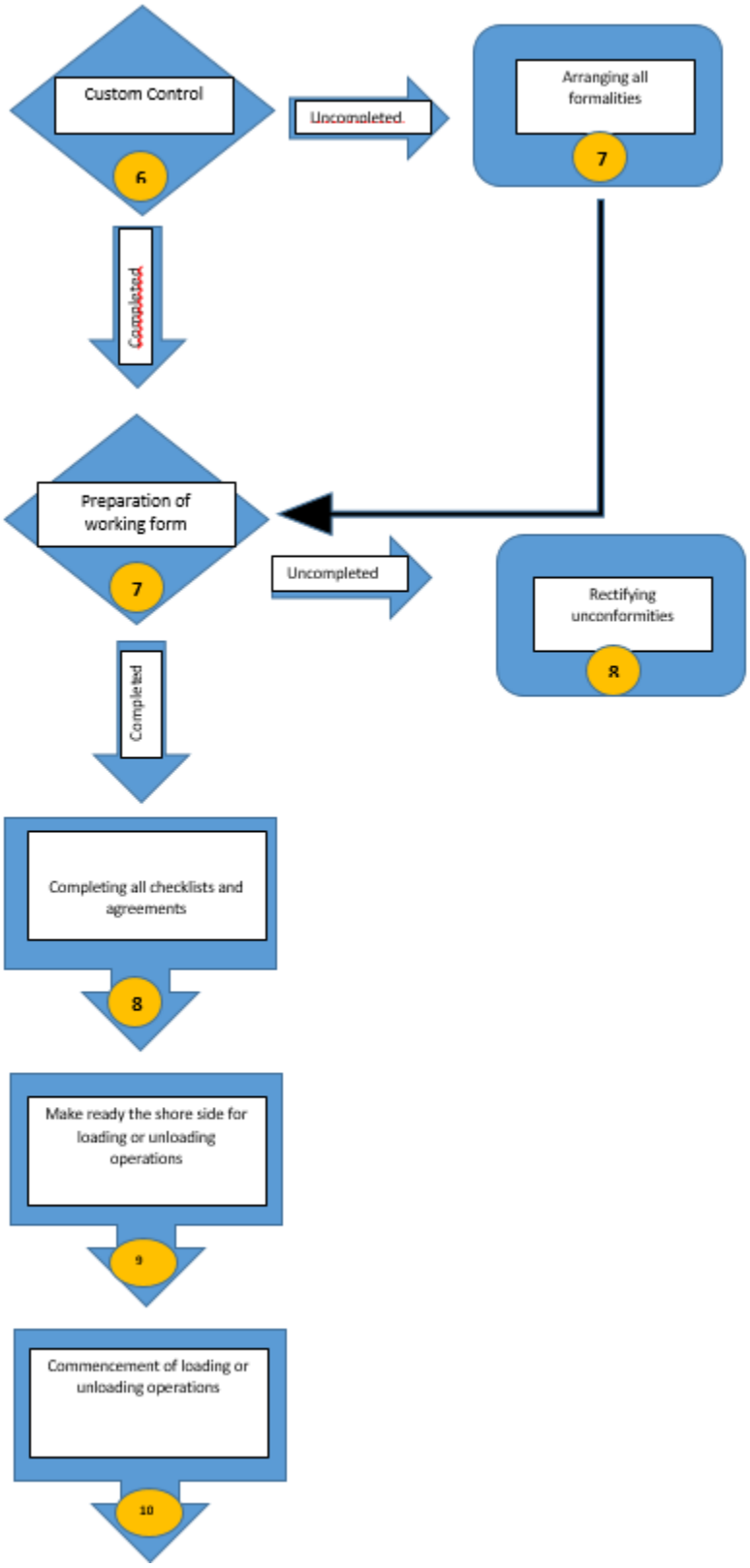
Custom Control
6
Uncompleted
Arranging all formalities
7
Completed
Preparation of working form
7
Uncompleted
Rectifying unconformities
8
Completed
Completing all checklists and agreements
8
Make ready the shore side for loading or unloading operations
9
Commencement of loading or unloading operations
10

FLOW CHART (3)

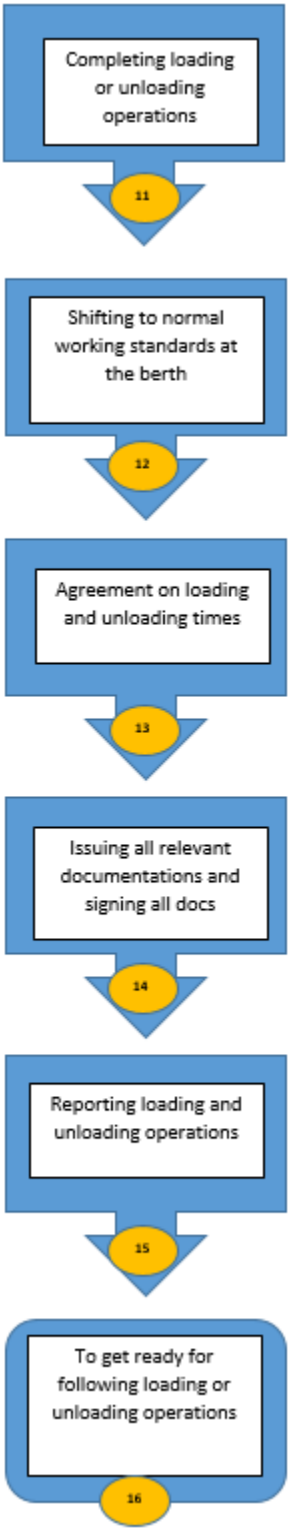
Completing loading or unloading operations
11
Shifting to normal working standards at the berth
12
Agreement on loading and unloading times
13
Issuing all relevant documentations and signing all docs
14
Reporting loading and unloading operations
15
To get ready for following loading or unloading operations
16

6.6. Handling Procedure of dangerous bulk cargo (Ferrosilicon – UN 1408)

A. OBJECTIVE: To know the hazards that may occur in ferrosilicon evacuation and make the operation healthy.

B. SCOPE: It covers ferrosilicon evacuation in bulk at İsdemir Port.

C. RESPONSIBILITY: All employees and the aalt sub-contractors are responsible for the Isdemir Port Management.

D. APPLICATION:

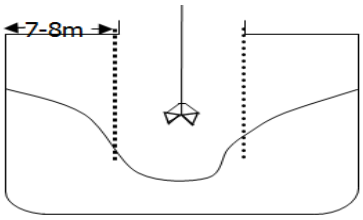

As seen in the first drawing on the side, the crane scoop works in the range shown by the dotted lines between the hatch covers. If the load is not fluid, the middle of the warehouse is pitted over time and the material remains on the edges.

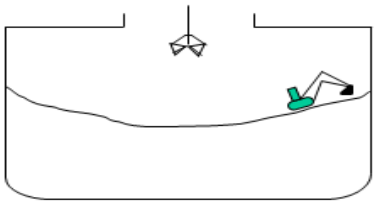

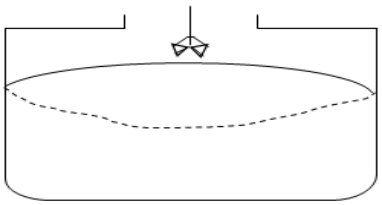

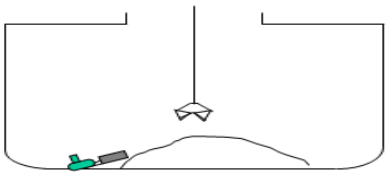

For the material left on the edges, as shown in the second drawing, the pavement excavator should be provided. In this way, the shovel does not need to be shaken too much. The load in the places where the crane bucket can not reach is being moved to the middle of the warehouse by the excavator and evacuation continues. The crane operator and the excavator operator have to work in a harmonious, careful and efficient manner.

If the load has a fluid structure, the dotted line in the figure on the right side decreases as the line is discharged. The duration of evacuation and cleaning is shortening. Warehouse general cleaning, stair cleaning, mail intervals etc. places are made with the help of a sufficient number of labor force.

As shown in the drawing on the side, the work machine supplied with the air cleaner is collected in the middle of the warehouse. After the collected material is taken with the crane, the warehouse evacuation is completed.

Safety precautions for all hands in ca

1. Specification of Ferrosilicon:
   - Class 4.3: Goods emitting gases once in contact with water
   - Liable emitting hydrogen gase when in contact with water

2. The main hazards that port staff should observe are:

- After the hatch covers are opened, the gas will be checked with the appliance.
- Danger of falling over doors or cargo holds in warehouses;
- Fall of non-stationary load;
- Compact work areas;
- Uneven work surface on load;
- Danger of falling by hanging;
- Hand transport hazards;
- Crane, loader, etc. unclear or insufficient communication with operators;
- Shaking loads;
- Falling objects;
- Operation of motorized equipment and vehicles and their fumes.

3. All personnel should wear work clothes, safety shoes, safety helmet, safety gloves, safety goggles, dust mask etc. you must use personal protective equipment.
4. Use protective personal equipment suitable for the job during handling hazardous bulk cargo (hazardous gas generating, poisonous gas when in contact with water, etc.).
5. Warehouse lid, warehouse ladder cleaning etc. parachute type safety belts and so on during working in risky areas. it is necessary to use it.
6. Crane and work machine operators work carefully during operation.
7. A selection of beakers, locks, hooks and safety controls shall be made to fit the physical characteristics and weight of the work machine to be provided or taken from the tank. Cracked, broken, bent, etc. material that has suffered physical damage is definitely not used.
8. It will not settle under the raised load.
9. All work machines (crane, loader, shoveler, etc.) in motion will be safe.
10. During the operation, the work machines, winches, stop at a safe distance outside the domain.
11. Piers, ship offshore and ship warehouse etc. The staff must be careful in order to avoid accidents that may occur as a result of printing on rubbish materials (pellets, pieces of cement, coal etc.) that may be found in the areas. Particularly because the structure of the pellet bur is rounded, the risk of slipping is high as a result of being pressed.
12. Hand or foot is not placed on the ship's rope or in the eyes, and the ropes under tension are not approached.
13. Keep the fathers around the ship ropes fit and clean.
14. There may be slippery and protruding surfaces on the ship. Be careful.
15. It is used after checking that the warehouse stairs and covers are safe.
16. When working at night, it is necessary to illuminate the ship.
17. Potentially ventilated enclosed spaces are ventilated.
18. Ship's stairs and scaffolding must be safe; should not be on the walkways of the harbor cranes.
19. Personnel must comply with all technical and safety rules, both written and visual, on board and on the dock.
20. There is no work other than the knowledge and knowledge of the watchmaker. Unsafe, risky, dangerous, etc. conditions are reported.

E. CONSIDERATIONS:

1. During docking and dismounting of vessels, port cranes are positioned so that they cannot hit

the ships and necessary safety precautions are taken.
2. The evacuation / loading process is done in accordance with the plan. Any modifications required to be made must be accepted by both the ship and the port representative.
3. Selection of buckets and bunkers according to the physical characteristics and density of the bulk cargo to be handled.
4. The balance of the gates (without tipping over the pier or crane etc.) is evacuated without deterioration.
5. An excavator is used to shorten the discharge time of the bulk cargo and to collect the load at places where the crane bucket cannot reach. The machine should be delivered in time.
6. Cleaning of decks and decks of loading / unloading warehouses is done quickly and safely.
7. The spoilage material that was lost during the operation was recovered without delay; is sent to the relevant stock area.
8. During the operation it is checked whether there is anything on the crane tracks that could prevent walking or cause damage.
9. Notify ship damage immediately; necessary measures are taken on time.
10. The personnel, the work machine and the crane should always work and be in a position to communicate and see each other during the cleaning operation.
11. If the evacuation is to be carried out on the quay, all units concerned with the cargo shall be notified. In addition, the Job Security Directorate is also informed. Pay attention to the following points:
12. Safe vehicle passage is ensured by adapting the road entrance and exit roads to traffic.
13. During the operation truck and crane work is observed. Adverse events are reported to the watchkeeper and necessary precautions are taken.
14. All operators should be careful during the operation of the cranes, work machines and trucks on the berth. In cases where the consultation is limited and traffic is intense, a staff member is always required as a marker.

6.7 Safe Handling of Hazardous Liquid Drains (Benzene UN 1114)

A. PURPOSE: It is published with the purpose of regulating the procedures and methods to be performed during the completion of the pumping process and the work to be carried out before the start of the loading operation by pumping it into the ship's cargo tanks.

B. SCOPE: The operations to be carried out include the pumping of crude benzene to the ship, the operations to be carried out at the dolphin jetty, the control and maintenance of the line, the connection of the hose from the buoy to the ship, and the disconnection of the hose from the ship's manifold.

C. IMPLEMENTATION: Loading raw Benzene

D. REQUIREMENTS:

1. Entrance of vehicles arriving during loading operation at dolphin jetty will not be allowed.

2. The necessary warnings and warning signs will be placed around the loading area. Operational and mechanical maintenance personnel at Dolphin Jetty will use lifebuoys and appropriate PPE

(work clothes, helmets, glasses, etc.). Personnel without Personal Protective Equipment will not be employed for duty descriptions and work areas.

3. Periodical maintenance, repair and calibration of the equipment and devices used in the loading process shall be carried out and the certificate or logbook documenting this situation shall be kept up to date.

4. Emergency telephone numbers shall be known by the responsible personnel and shall be reported to the relevant departments in case of emergency and accidents.

5. Flexible hoses to be used for picking up dangerous liquid bulk goods; type approval and the type of pipe, the maximum working pressure of the pipe, the certificate showing the month and year of production. The pipes shall be maintained and repaired with the tests according to the criteria specified in the ISGOTT and shall be recorded. Hoses that are to be used in the driving operation but are not in service shall be maintained in accordance with the criteria specified in ISGOTT.

6. A sufficient number of electric insulation flanges shall be provided for the flexible hoses to be used in the picking up of hazardous liquid bulk goods.

E. FLEXIBLE HOSES AND LOADING LINE USED:

1. Flexible hoses shall be suitably protected if they are prone to damage by impact, and the isolated flange shall be tested in accordance with Section 17 of the ISGOTT.

2. Flexible hoses shall be physically inspected visually before loading, and shall be informed to the responsible shift supervisor when any wear or deformation is detected.

3. Load line pressure controls shall be made and recorded by an accredited organization.

F. CONSIDERATIONS BEFORE OPERATION:

1. Check that the fire extinguishing systems on the dolfen scaffold are in operation (ISGOTT 24.8).

2. It is strictly forbidden to smoke in the dolfen scaffolding, loading pumps, storage tanks.

3. Mark the hazardous chemical containing hazard identification label UN code at the pump station and in the storage tank as hazard identification mark.

4. If there is no possibility to control the flexible load hose and the chrome pipe with the diver, press the line with 2,5 bar nitrogen and wait for 30 minutes under this pressure to confirm that the line is firm.

5. Provide a safe passage between the ship and the shore and secure it with a safety net (ISGOTT 16.4.2.1 - 16.4.5).

6. In order to be able to manage the loading operation safely, as well as to be accountable and accountable, the Safety Check List between the ship and the premises shall be signed by both parties (ISGOTT 26.3.1).

7. Share information on benzene (MSDS) with personnel responsible for loading on board (ISGOTT 22.4.2.1).

8. Reconfirm the loading plan with the personnel responsible for the loading operation on board prior to the benzol loading operation (ISGOTT 22.5).

9. Pre-load cargo tanks should be checked after all safety precautions have been taken (ISGOTT 24.4).

10. Ensure that the personnel assigned during the operation are trained in all safety and emergency procedures (ISGOTT 15.5.1).

11. During removal of the loading hose from the sea, make sure that the capacity of the hose harness is adequate and avoid any sharp contact with the ship's structure during shooting (ISGOTT 18.2.13).

12. Make sure that the cord used for hose from the sea is not damaged by contact with the ship's body (ISGOTT 18.2.13).

13. Make sure that the cord connected to the ship's manifold from the sea is connected to a solid point on the ship (ISGOTT 18.2.13).

14. Check the cargo hoses for possible damage before operation and against structural abnormalities (ISGOTT 18.2.6.1-18.2.10).

15. In the event of damage to the hoses from the sea, immediately notify the authorized person concerned (ISGOTT 18.2.13).

16. Ensure that the hose from the sea to be connected to the ship manifold is not under pressure in the circuit between the blind flange and the final valve before the blind flange is dismantled (ISGOTT 18.2.2-24.6.2).

17. Be prepared for the possibility of contamination during blind flange dismantling (ISGOTT 24.6.2).

18. Check the existing circuit sweeping and drainage system (ISGOTT 24.6.5) to prevent possible contamination in emergency hose dismounting conditions.

19. After all lines have been pressure tested, connect the flexible load hose under water to the manifold of the tank.

20. Confirm that the hose is connected to the ship manifold and that the manifold valve is open.

21. Stay in constant contact with ship personnel and command center.

G. CONSIDERATIONS DURING OPERATION:

1. Receive confirmation that the vessel is connected to the suction manifold of the hose and that the pump is started after the confirmation that the suction valve of the ship is open.

2. The ship's shore connection hose shall be observed during the operation and intervened by the staff in case of a hazardous situation (ISGOTT 15.5.2)

3. Staff regularly check pipeline and hose pressure regularly (ISGOTT 15.5.3)

4. Staff regularly check the amount of cargo loaded (ISGOTT 16.11.3)

5. Check that the operation area and the sea surface are adequately illuminated after the sun has set (ISGOTT 17.4).

6. Ensure that no load is placed on the cargo hose due to the change in the vertical dock manifold and ship manifold as a result of the loading operation (ISGOTT 18.2.12).

7. Continuous inspection of all the doors and similar structures on board that are facing the cargo area (ISGOTT 24.1).

8. All valves that are to be closed during operation shall be checked regularly and any leakage and leakage shall be monitored regularly (ISGOTT 24.7.1).

9. The max. Stop the 50 tons dump pump for the amount of benzene tonnage.

H. POINTS TO BE CONSIDERED AT THE END OF THE OPERATION:

1. Give to the ship, even with the remaining 50 tons of crude benzene nitrogen gas, that it will be given with the intent to empty and purge the line.

2. Get knowledge of free water control in Ship Tanks.

3. Fill the inside of the cargo with sea water by passing through the dialogue with the ship for the flexible load hose to sink under water.

4. Take care that there is no pressure in the circuit before removing the cargo hose from the manifold.

5. Mount the blind flap so that the cargo hose to be supplied to the sea is leak-proof.

6. Visually inspect the Kago hose to ensure it is not damaged by contact with the ship's body (ISGOTT 182.2.13).

7. The cargo hose to be delivered to the sea will be transported to a single point on the seabed and regularly transported to the seabed (ISGOTT 18.2.13)

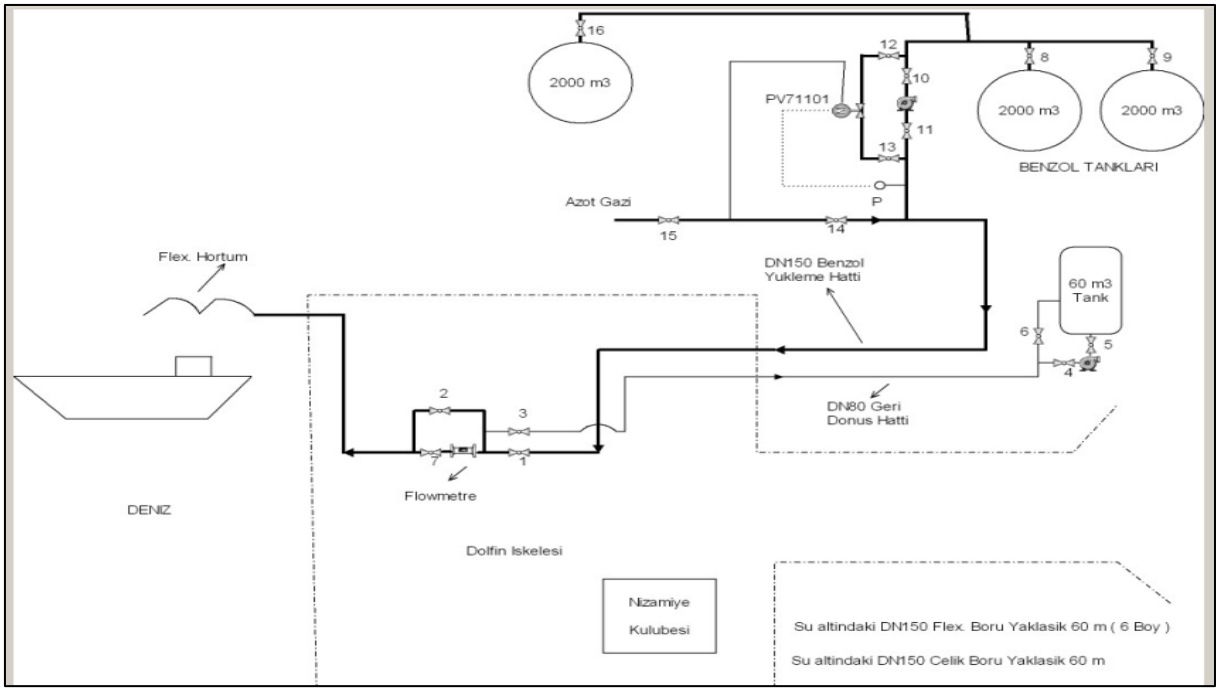

6.8 Safe Handling of Hazardous Liquid Bulk Carriers (Tar UN 1999)

A. PURPOSE: It is published with the purpose of regulating the procedures and methods to be performed during the completion of the pumping process and the work to be carried out before the commissioning of the raw tar pumped to the ship by the export registration.

B. SCOPE: The operations to be carried out include the pumping of the raw tar to the ship, the operations to be carried out on the dolphin scaffold, the control and maintenance of the line, the docking of the ship to the dock and the departure of the ship at work.

C. APPLICATION: Loading of Crude Coal Tar

D. REQUIREMENTS:

1. Entrance of vehicles arriving during loading operation at dolfen scaffold will not be allowed.

2. The necessary warnings and warning signs will be placed around the loading area. Operational and mechanical maintenance personnel at the coastal facility will use lifebuoys and appropriate PPE (work clothes, helmets, glasses, etc.). Personnel without Personal Protective Equipment will not be employed for duty descriptions and work areas.

3. Periodical maintenance, repair and calibration of the equipment and devices used in the loading process shall be carried out and the certificate or logbook documenting this situation shall be kept up to date.

4. Emergency telephone numbers shall be known by the staff in charge and, in the case of emergencies and accidents, first aid materials to be used for intervention shall be kept in places known and easily accessible by the personnel.

5. Flexible hoses to be used for picking up dangerous liquid bulk goods; type approval and the type of pipe, the maximum working pressure of the pipe, the certificate showing the month and year of production. The pipes shall be maintained and repaired with the tests according to the criteria specified in the ISGOTT and shall be recorded. Hoses that are to be used in the operation but not in service shall be kept in a manner compatible with the criteria specified in ISGOTT.

6. A sufficient number of electric insulation flanges shall be provided for the flexible hoses to be used in the picking up of hazardous liquid bulk

E. FLEXIBLE HOSES AND LOADING LINE USED:

1. Flexible hoses shall be suitably protected if they are prone to damage by impact, and the isolated flange shall be tested in accordance with Section 17 of the ISGOTT.

2. Flexible hoses shall be physically inspected visually before loading, and shall be informed to the responsible shift supervisor when any wear or deformation is detected.

3. Load line pressure controls shall be made and recorded by an accredited organization.

F. CONSIDERATIONS BEFORE OPERATION:

1. Check that the fire extinguishing systems on the dolfen scaffold are in operation (ISGOTT 24.8).

2. It is strictly forbidden to smoke on the dolfen scaffolding, in the loading pumps, in the storage tanks.

3. Plate the hazard identification label at the pump station and in the storage tank field containing the UN code identifying the hazardous chemical and marking the hazard.
4. Against the possibility of leakage from the hose or hattan during loading, the operator will have suction barriers ready. In the event of a spill or leak, information will be provided immediately.
5. Provide a safe passage between the ship and the shore and secure it with a safety net (ISGOTT 16.4.2.1 - 16.4.5).

6. In order to be able to manage the loading operation safely, as well as to be accountable and accountable, the Safety Check List between the ship and the premises shall be signed by both parties (ISGOTT 26.3.1).

7. Share information on the tar (MSDS) with the personnel responsible for the loading operation on board (ISGOTT 22.4.2.1).

8. Reconfirm the loading plan with personnel responsible for the on-board loading operation prior to the tar loading operation (ISGOTT 22.5).

9. Pre-load cargo tanks should be checked after all safety precautions have been taken (ISGOTT 24.4).

10. Ensure that the personnel assigned during the operation are trained in all safety and emergency procedures (ISGOTT 15.5.1).

11. Check the cargo hoses for possible damage before operation and visually check for structural abnormalities (ISGOTT 18.2.6.1-18.2.10).

12. Check that there is no pressure in the circuit before removing the blind flange (ISGOTT 24.6.2).

13. Be prepared for the possibility of contamination during blind flange dismantling (ISGOTT 24.6.2).

14. Check that the emergency shut-off coupling is correctly connected and that there is no fault (ISGOTT 24.6.5).

15. Check the existing circuit sweeping and drainage system (ISGOTT 24.6.5) to prevent possible contamination in case of emergency hose disconnection.

16. After receipt of the loadable information, go to the ship with the Coke Operation Maintenance Personnel to connect the flexible load hose to the manifold of the ship.

17. Confirm that the hose is connected to the vessel manifold and that the manifold valve is open.

G. CONSIDERATIONS DURING OPERATION:

1. Turn on / off the valves after the hose connection is completed and the ship can be started for loading information. Contact the Water Facilities Directorate. Start the pumping of the tar.

2. The ship's shore connection hose shall be observed during the operation and shall be intervened by the staff in charge in case of a hazardous situation (ISGOTT 15.5.2).

3. The staff will regularly check the pipeline and hose pressure regularly (ISGOTT 15.5.3).

4. Staff will regularly check the amount of cargo loaded (ISGOTT 16.11.3).

5. After the sun sets, check that the operation area and the sea surface are adequately illuminated (ISGOTT 17.4).

6. As a result of the loading operation, it shall be ensured that no load is placed on the cargo hose due to the change in vertical level of the berth manifold and ship manifold (ISGOTT 18.2.12).

7. The presence of all the doors and similar structures on the ship facing the cargo area must be monitored continuously (ISGOTT 24.1).

8. All valves which are to be closed during operation shall be checked regularly and possible leakage and leakage shall be observed regularly (ISGOTT 24.7.1)

H. POINTS TO BE CONSIDERED AT THE END OF THE OPERATION:

1. Stop loading 20 tons of loading tonnage and agree with the ship and pour the ship into the ship with steam. In case of overloading, again agree with the ship and pour the tar steam in the line to the ship's shore tank.

2. Take care that there is no pressure in the circuit before removing the cargo hose from the manifold.

3. Mount the blind flap so as to provide leakage to the cargo hose.

4. Visually inspect the Kago hose to ensure it is not damaged by contact with the ship's body (ISGOTT 182.2.13).

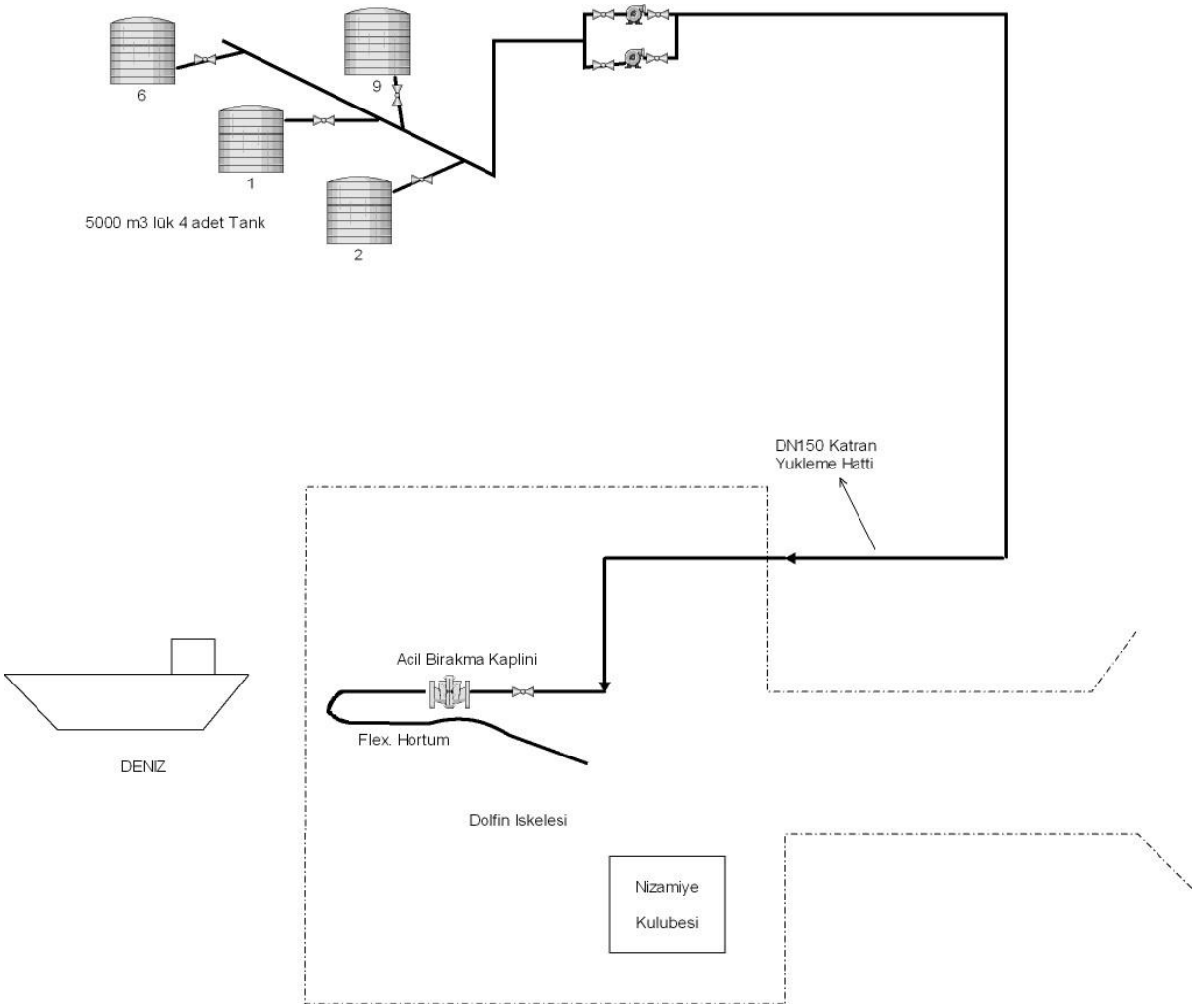

6.9 Safe Handling Procedure of Scrap Cargo (UN-2793)

A. OBJECTIVE: It is aimed to establish, test and evacuate the evacuation system on scrap ships in accordance with OHS and environmental legislation.

B. SCOPE: It covers all steps in the evacuation of the scrap ships.

C. APPLICATION:

1. Occupational Health and Safety is the top priority in all activities.
2. Ensure that all materials necessary for evacuation are ready by moving the vessel to the point where the vessel is to be evacuated. (Polyp, bunker, cable wrapping, plate sheet, board, etc.).
3. Ensure that 1 wheel loader is ready to be used on the dock for use in the cleaning of bunker bottoms.
4. If the ship is to be evacuated with cranes, get the certificates of the cranes on board.
5. The crane operators will check the ship's cranes by taking them from the ship's personnel and the ropes of the ship's crown will be checked together with the operating shift supervisor and the ship's crew.
6. Cover the deck with sheet metal, sheet metal, or conveyor belts if the deck of the ship is wide or if the deck is susceptible to damage.
7. The electrical connections of the cranes will be made by the Liman Elektrik team and the contractor company maintenance team will be informed and the maintenance team will be connected to the poles.
8. Set the position of the bunkers according to the warehouses to be worked in line with the cargo plan received from the ship.
9. Close the dock side of the ship deck with the safety lane and block access to the inlet and outlet during evacuation. Ensure that the warehouse is monitored and the entrance and exit to the warehouses are done by the sea.
10. Ensure that the ship's warehouses are balanced and that the ship is finished according to the quantity of goods in the warehouse. Check the fuels of the work machines that will work in the warehouses.
11. During the evacuation of the gates, under no circumstances will polizers, bunkers and crane booms be passed.
12. Maneuver the vehicle on full poly bunker without taking the position under the bunker and descending from the driver's cab. Open the polibi bunker. Load it so that it does not carry scrap from the car.
13. If the rope, wire, etc., which makes it difficult to evacuate within the wreckage, the necessary permits (ship, harbor, Port Authority) are taken and then these parts are cut off with a torch.
14. Once the car is out of the bunker, check the bunker every time you clean it.
15. After the vehicle is out of the bunker, check the items that fall from the dorsal horns, fall down, and fix it.
16. Clean the scrapers that accumulate near the sea dock at the dock during excavation with an excavator.
17. Stop the vehicle if there is material such as cable wire hanging from the vehicle after the vehicle has been removed from the bottom of the bunker and transfer the dangling part into the vehicle.
18. Use the safety belts when casting scraps in the storage stairs and scraps in the ribs.
19. At the end of the ship do the bunkers clean on the dock.
20. At the end of the ship, information on the latest operating conditions of all poles, panels, cables and cable reels shall be reported to the Port Maintenance and Repair Chief Engineer by the contractor. Maintenance and Repair Chief Engineer will make all scrap evacuation equipment ready and ready for the next ship.

E. CONSIDERATIONS:

1. Vincin will be kept away from the maneuvering area, not under the polyp and bunker.
2. The cups of the cars will not be in the direction of vincin rotation.
3. Vehicle drivers will leave their cars when scrap is being evacuated.
4. Prior to evacuation, radioactive control of the mobile detectors and all warehouses shall be carried out according to the RADIATION MEASUREMENT PROCEDURE.
5. All trucks that are evacuated are passed through the radiation field. If a radiation is detected, the material determined according to the RADIATION DETECTION and RADIOACTIVE MATERIALS MANUFACTURING PROCEDURE is taken to the quarantine and disposal is sent.

6.10 Radiation Measurement Procedure

A. PURPOSE: It is published in order to ensure the safety of the person measuring the radioactive source and the people in the environment.
B. SCOPE: Electronic Automation Directorate Calibration and Weighing Systems Chief Engineering Engineer Weighing Systems and Radioactive workshop personnel.
C. APPLICATION:

Radiation Measurement Instruction:
1. Work in the bullet vest and at doses appropriate for dose severity where the dose values specified in Article 7c and Article 10 of the Radiation Safety Regulation exist.
2. Check the radiometer and set it to zero.
3. Absolutely carry the dose.
4. Be careful that the chums of the sources are open.
5. Make initial measurements at 1 cm from the weld sheath.
6. The second measurement is 50 cm. Do it remotely and from where you have the most radiation.
7. Operate the "Hazard Status Plan" if you can not get the measurement value in the area where the radiation should be measured.
8. If the radiation is above the limits, immediately place a radiation warning sign and report to the supervisor.
9. Save the measurements in the respective form and on the computer at work.
10. Provide the distribution of personal dosimeters, notify the user of TAEK measurement values.
11. The personal dosimeter measurement values and licenses will be stored by the Radiation Safety Officer.
12. Check the Radiography Level-1, Radiation Prevention Course Certificates, Equipment Licenses and Hazard Status Plan for Industrial Radiography to be performed by the radiographer, and obtain photocopies if necessary.
13. Fill and follow the FR.IS.0641 Radiography Study Form.
14. Do not allow staff to enter the lane where a dose rate of 2.5 mSv / h is measured.
15. File 1 copy of the measurements made where the radioactive materials are located and give 1 copy to the Radiation Safety Officer.

D. CONSIDERATIONS:
1. There is a spare battery for the radiometer devices.
2. Do not make any measurement or safety tape on the upper and lower floors of the area where

the safety strip is to be pulled.
3. Try to complete the work as soon as possible, no matter how low the dose is when working with radioactive sources.

6.11 Radiation Detection and Radioactive Material Handling Procedure

A. OBJECTIVE: It has been published with the aim of preventing the entry of radioactive material which may be found in scrap materials to İsdemir field.

B. SCOPE: Scrap materials purchased from Isdemir AS and control of internal scrap on request of Steel Mills, Electronic Automation Directorate Calibration and Weighing Systems Chief Engineering Weighing Systems and Radioactive Workshop personnel and transportation and work machinery personnel.

C. APPLICATION:

This instruction is made in accordance with the TAEK Radiation Safety Regulation.

Scrap Materials Moved by Vehicle:

1. If the detector is closed, it is operated by the operator according to the documents.
2. The car driver is warned by the weighbridge operator for the slow penetration of the vehicle (the vehicle speed must not exceed 5 km / h).
3. After the vehicle has left the detector, the "RADIATION MATERIAL NOT FOUND" display appears on the computer screen.
4. The ticket of the vehicle without the radiation material is removed from the car driver by the weighbridge operator.
5. On the first form of the ticket, "CHECKED" is printed. The date is written in hours.
6. If the alarm appears at any level in the detector, the vehicle is reloaded by the weighbridge operator.
7. If an alarm is detected for the second time, the weighbridge operator allows the vehicle to be taken to the Radioactive Quarantine Zone and leave the vehicle of the vehicle driver. The vehicle keeps the chauffeur in the weighbridge control room.
8. Weigher operator who takes the vehicle to the quarantine zone, Radiation Safety Officer (Tel: 4010), Directorate of Transport and Work Machinery, Ammunition and Shipping Supervisor. (Tel: 3498) and the Radioactive Systems Team (Tel: 172 - 4072 - 4272).

9. The Radioactive Systems Team performs the following tasks on the notice received.

   a. They prepare the necessary equipment, place it on the transport vehicle and transfer it to the scene.
   b. It examines the alarm records that the detector has given and obtains preliminary

information about the possible location and level of the source in the vehicle.
c. Wear the lead vest, open the hand gauge and measure and approach the quarantine area.
d. The Radioactive Systems team detects the distance of 0.1 mRem / hour (1 microSV / hour) dose of the vehicle located in the radioactive quarantine area. The Safety Directorate pulls staff safety lane.
e. The quarantine carries out the measurement with a hand detector in the vehicle which is kept by the weighbridge operator. Records the measurement results in the Radioactive Material Detection Form (FR.IS.0854).
f. If the measured value in the driver's cab is less than 7.5 microSV / hour, the truck driver is asked to discharge the vehicle in a controlled manner by wearing a lead vest. If the measured value is higher, studies are always carried out on the approval and control of the Radiation Safety Officer in order for the studies to continue.
g. The incoming excavator operator is wearing a lead vest. It is desirable to distribute the poured scrap with the excavator.
h. When a piece of radioactive material is unloaded, the radioactive material is detected by performing the necessary screening with the detectors within the framework of the Radiation Safety Regulations and Regulations.
i. Isdemir Radiation Safety Hazard Status Plan is not applied in materials with a dose rate of 40 microREM / hour (0.4microSV / hour) - 2 mRem / hour (20microSV / hour).
j. Detects the radioactive material in the scrap and records his measurements in the Radioactive Material Detection Form (FR.IS.0854). After taking the photo of the material found, the radioactive material is poured into the quarantine pit in the quarantine area and closes the pit cover.
k. If the vehicle is not completely discharged, it is checked again whether there is any other radioactive substance in the detector. In case of a repeat alarm, items 8, 9, 10 and 11 are repeated.
l. If a new alarm is not received, the waste poured into the quarantine area is filled with the excavator. The vehicle is passed again from the detector for control.
m. The Isdemir Radiation Safety Hazard Plan (PLN.0014) is applied if 2 mRem / hour (20 microSV / hour) or more dose intensity is measured on the radioactive substance. The Radiation Safety Officer (4010) is informed.
n. Radiation Safety Officer; Protection and Safety Notification (155), First Aid for Health (112), Job Safety Directorate (157) and Electronic Automation Officer (3064).
o. Electronic Automation Manager, Factory Management Officer (3059), and Port Officer (3080).

In case of Radiation Safety Hazard Plan;

10. The Protection and Security Directorate sends the personnel to the event to provide environmental protection.
11. The Health Directorate sends the Ambulance to the scene to take the people exposed to Radiation to Health.
12. The Job Safety Directorate sends the staff to the staff event to take the environmental safety strip.
13. The Directorate of Transport and Work Machinery sends the excavator to the radioactive

quarantine zone in the port area.
14. Work Safety Directorate The personnel pulls the safety strip on the area determined by the Radioactive Systems Team.
15. Health Directorate Personnel, the car driver who is likely to be exposed to radiation, takes the ambulance to the Health Directorate for control.
16. After the above-mentioned operations, the vehicle is re-transmitted from the Radioactive Panel Detector again.
17. If the vehicle is not alarmed while the vehicle is passing through the detector for the 3rd time, the bilge "CONTROLLED" mark is struck by the weighbridge operator.
18. Vehicle without RADIATION MATERIAL is sent to the Scrap Inventory Site.
19. The Scrap Stock Watch Officer checks the stamp of the check.
20. Vehicle controlled by the Scrap Stock Exchange Officer shall be evacuated.
21. Vehicles without a check mark are notified to the Directorate of Protection and Security. (Tel: 4005-4007)
22. Taken to the Detector Station under the supervision of the Conservation Officer.
23. Vehicle with radioactive material is notified to the Procurement Directorate to contact the scrap supplier.
24. T.A.E.K is informed about the situation determined by the Radiation Safety Officer. If the goods are not nationalized, they allow the operation of returning them to the country of origin to begin.

Scrap Materials Moved from Port Area
1. Preliminary inspection is carried out by the Radioactive Team in the ship warehouses bringing scrap by the request of the Port Directorate.
2. 1.24 items are applied.

D. CONSIDERATIONS:

1) Avoid direct contact with radioactive material. Move the radioactive material with a mash.
2) Put on the bullet vest and gloves.
3) Put on safety glasses.
4) Continually check the dose rate values.
5) Comply with the Radiation Safety Regulations and Regulations published by TAEK.
6) The quarries in the quarantine area are polyp crane, excavator and so on. Do not stop in the quarantine while being distributed with a vehicle such as.
7) In the quarantine area, remove the vehicle dorses and empty the scrapers.

6.12 Hot Working Procedure

A. PURPOSE: To protect workers from work accidents and to prevent material damages by preparing safe working environment for cutting, welding and maintenance works to be carried out in areas where hazardous materials are handled in the port area.
B. SCOPE: ISGOTT covers the methods and principles of cutting, welding and maintenance work to be carried out in areas where hazardous materials are handled according to the hot working definition in Section 2.8.1.

C. IMPLEMENTATION: A written permission will be obtained from the port authority of Iskenderun Harbor before the start of hot works and operations on board or in port. The requirements specified in Section 2.8 of ISGOTT shall be fulfilled for hot working operations to be carried out at İsdemir port.

1. Repair works to be carried out with hot work are not allowed on vessels approaching the port. However, in case of necessity, hot works are carried out after the ship agent obtains the permits in accordance with the legal regulations.
2. Before the start of the warm work, a work meeting is held with the Job Safety Directorate and the contractor. Risks in the region where work is done in the meeting are defined and measures to be taken are decided.
3. At the end of the on-the-job meeting, relevant parties are made a protocol prepared according to ISGOTT Annex-F Hot Work Permit form (ISD.FRM.0197).
4. All interested parties are informed before starting work.
5. Work will not be done except for the start and end times of leave stated in the Hot Work Permit Form.
6. Observer personnel shall be appointed, if necessary, to prevent entry of unrelated and unauthorized personnel to be restricted using warning and warning systems at the safe distance of the workplace.
7. Welding and cutting shall be closed by closing the closest valves.
8. By opening the ventilation valves, steam and nitrogen will be given to the system and porch operation will be completed.
9. All dangerous substances or gases containing a risk of burning or explosion shall be excluded from the hazardous area which is completely restricted.
10. In closed containers such as drums and barrels, the ventilation hole and the place to be welded shall be filled with water to be released.
11. Studies in Closed Areas;
• At least 2 points of entry and exit shall be provided for the activities carried out in closed areas.
• The oxygen level is measured before entering the enclosed area. If it is below 19,5, it will not enter the closed area.
• Ensure that the indoor temperature is below 50 ° C.
• Scaffold / platform / ladder / step etc. for safe indoor entry-exit. will be prepared.
• When working in indoor environment, portable lighting will be prepared as 24V.
• The communication and coordination of the employees in the closed environment will be provided completely.
• The work carried out in the closed environment will be carried out continuously under the supervision of the observer.
• CO, O2, Temperature, explosive environment measurements have been made and the working conditions will be appropriate when working in closed environment.
• Ensure adequate ventilation in the indoor area.
• Evacuation rehabilitation will be carried out regarding the safe evacuation of workers in the enclosed area.
• All personnel working in the closed area have personal protective equipment, emergency escape mask, clean air mask, gas measurement detector etc. business equipments.
12. If welding and cutting work is to be carried out on a tank,
• Observer staff will be appointed if necessary to prevent entry of unrelated and unauthorized personnel to be restricted using warning and warning systems at the safe distance of the

workplace.
• The inlet and outlet valves of the tank will be closed and blinded.
• The vent pipes or lids will be opened.
• The tank will be thoroughly cleaned, ventilated, cooled. Cleaning work will be done with water, detergent, caustic soda and steam. Cutting and welding will be allowed after welding and making sure that no residual material is left in the tank to be cut.
• Oxygen will never be used to clean closed containers, pipelines and clothes.
13. Nearly flammable, explosive, flammable material shall not be kept near the place where welding and cutting are done.
14. Welding and cutting work will not be done in any way on greased parts with oily handles, greasy handles, work place will always be clean and clean.
15. Welding and cutting work will never be done with bare hands, bare feet and naked eye.
16. If the welding and cutting work is done in an enclosed environment, the environment shall be ventilated by natural or by gravity.
17. Cutting and welding work will not be performed on any machine, device or vehicle in operation.
18. No welding and cutting work will be done on the roof, in high places, without any safety belt, without scaffolding, without platform, by holding on one side.
19. Welding machine, oxygen and acetylene tubes shall not be taken in, but left in basements, boilers and large size tanks.
20. The fire extinguisher will be kept ready near the place where welding and cutting work will be done.
21. The condition of the cut material will be thoroughly examined and will not be dwelled under the material.
22. During the cutting process, the oxygen will be excessively opened due to the pressure, so excessive sparks and slag will not flow. The acetylene pressure will not exceed 2,70 kg / cm^2.
23. After the necessary precautions are taken, the works will be started.
24. In order to prevent other workers from being exposed to radiation and sparks during welding, a barrier will be placed between them.
25. The socket of the electric welding machine shall be plugged into the socket with the ground wire. Oxygen lines will never be used with grounding.
26. 24V for lighting when working in large volumes. or a 42 volt low voltage moving light will be used.
27. Workers engaged in cutting and welding in closed areas will keep a second worker under control.
28. The closed containers that are repaired will be painted in accordance with ISDEMIR color codes.
29. Periodical testing and control of the tanks shall be carried out according to the test pressure values for each tank.
30. The worker who performs the welding and cutting work will definitely use the protective materials given to him about his work.

ISDEMIR LEASE AND CONTRACTOR COMPANIES;

IMPORTANT SAFETY MEASURES BELOW THAT THEY WILL HAVE FIRE OR DANGEROUS WORK TO BE PERFORMED ON THE PORT;

• Personal protective equipment and work clothes for employees; shall be fully supplied and the necessary checks shall be carried out.
• Warning-warning material / sheets that may be required for the work area; will be fully supplied and the work area will be closed with safe distance warning and warning materials and uncontrolled access.
• Observer / staff will be assigned for critical points that may be deemed necessary within the created safety area.
• Measuring devices (CO, O2, H2, etc.) to be used in operation; calibration examinations have been made and the use will be appropriate.
• All employees who will be assigned to work in writing and mentioned above will be provided with training on "Use of Gas Safety and Equipment", "General Occupational Health and Safety" and vocational training specific to the job.
• Sufficient control and supervision from the beginning to the end of the work will be provided by the enterprise.
• Scaffolding, stairs, work platforms, etc. systems will be checked for compliance.
• In case of an emergency, the necessary precautions are taken into consideration and safety measures will be provided for the safe evacuation and safe operation of employees.
• Enough lighting will be provided on working and escape routes.
• Employees of companies that may be / may be located in the working area and / or in the vicinity, third parties, other employees, guests, etc. will be removed from the working environment and possible uncontrolled transitions to the working environment will be prevented.
• Railway, intermediate / main roads, etc. passing near the study area. safety; the necessary coordination will be provided and information will be given about the places that may be affected.
• Other units / firms that are affected / influenced by the work will be provided with necessary information (via general mail etc. or by telephone).
• Compliance (line pressure, sufficiency, etc.) of inert gas lines (nitrogen, argon, water vapor etc.) to be used for Purge operation will be checked for deactivation /
• The energy system of the line to be operated is controlled and the valves / switches / it will be checked that it has switched on and off safely.
• The energetic systems in the working area shall be grounded against static electricity / leakage electricity.
• In the work carried out in flammable / explosive / flammable / burning / poisonous gas systems, the used hand tools will not spark and the work equipments will be provided with ex-proof (arc sealed / flameproof).
• Hand tools and work equipments in accordance with the relevant TS / EN and CE norms are used during operation.
• Periodical maintenance of the work equipment used during the construction of the work (if any) will be made according to the type.
• All equipment required for the operation is available in the working area.
• Water lock on the system to be operated (if any). the flow of gas filled and uncontrolled by the enterprise shall be prevented.
• It shall be checked that the valve that feeds the line to be operated and / or the system fulfills the duty of fully switching on / off.
• Any leakage on the hazardous gas / fluid line to be operated. it will be checked.
• Sparks, electric arcs, etc., likely to spread from work equipment, in explosive / flammable /

flammable gas atmospheres. all ignition sources will be de-energized and secured.
• In case of explosive / flammable / flammable gas atmosphere during operation, the relevant unit authorities will stop working and the line will be closed and secured.

All gas, steam, etc. required on the line and environment to be worked on after the end of the work. measurements will be made and it will be checked that there are no gas leaks or unsafe conditions.

6.13 Procedures for Using MFAG in the Event of Dangerous Material Injuries

A. OBJECTIVE: To explain how to use the Medical First Aid Guide for Use in Accidents involving Hazardous Materials (MFAG) by personnel.

B. SCOPE: Isdemir Port Directorate covers medical first aid intervention in accidents occurring during the handling of Dangerous Goods.

C. APPLICATION:

The IMO/WHO/ILO Medical First Aid Guide for Use in Accidents involving Dangerous Goods (MFAG) refers to the substance, material and articles covered by the International Maritime Dangerous Goods Code (IMDG Code), and the materials covered by Appendix B of the Code of Safe Practice for Solid Bulk Cargoes (BC Code) .It is intended to provide advice necessary for initial management of chemical poisoning and diagnosis within the limits of the facilities available at sea.

This Guide should be used in conjunction with the information provided in the IMDG Code, the BC Code, the Emergency Procedures for Ships Carrying Dangerous Goods (EmS), the International Code for the Construction and Equipment of Ships Carrying Dangerous Chemicals in Bulk (IBC Code), and the International Code for the Construction and Equipment of Ships Carrying Liquefied Gases in Bulk (IGC Code).

The MFAG itself gives general information about the particular toxic effects likely to be encountered. The treatment recommended in this Guide is specified in the appropriate tables and more comprehensive in the appropriate sections of the Appendices. However, differences exist between countries on certain types of treatment and where these differences occur they are indicated in the relevant national medical guide.

Treatments in this guide cater for the accidental human consequences of the carriage of dangerous goods at sea. Accidental ingestion of toxic substances during voyage is rare. The guide does not cover ingestion by intention.

Minor accidents involving chemicals do not usually cause severe effects provided that the appropriate first aid measures are taken. Although the number of reported serious accidents is small, accidents involving those chemicals which are toxic or corrosive may be dangerous, and must be regarded as being potentially serious until either the affected person has completely recovered, or medical advice to the contrary has been obtained.

Information on the treatment of illnesses which are of a general nature and not predominantly concerned with chemical poisoning may be found in the ILO/IMO/WHO International Medical Guide for Ships (IMGS).

D. HOW TO USE THIS GUIDE

In any case of exposure, start with Emergency Action and act as advised.

For the convenience of users, and to ensure rapid access to the recommendations in an emergency, this Guide is divided into sections which are grouped to facilitate a three step approach.

Step 1:	Emergency Action and diagnosis	Start here!
Step 2:	Tables	The Tables give brief instructions for special circumstances.
Step 3:	Appendices	The Appendices provide comprehensive information, a list of medicines/drugs, and a list of chemicals referred to in the tables.

NOTE: The list of chemicals is limited to those few chemicals requiring special treatment. The list is given both in alphabetical and numerical order (UN No) in Appendix 15 to this guide.

Emergency action

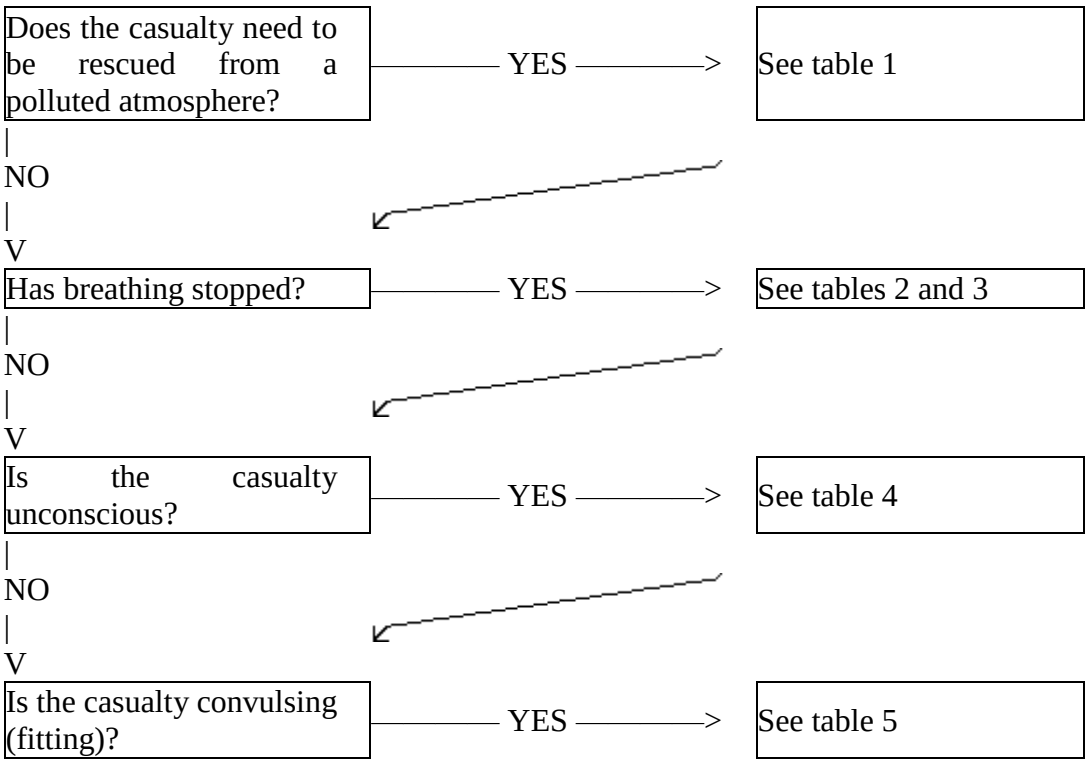

|
NO
|
V

Are the eyes contaminated? —— YES ——> See table 7

|
NO
|
V

Is the skin contaminated? —— YES ——> See table 8

|
NO
|
V

Has the chemical been inhaled? —— YES ——> See table 9

|
NO
|
V

Has the chemical been ingested? —— YES ——> See table 10

|
NO
|
V

Is there severe pain? —— YES ——> See table 13

|
NO
|
V

|
|
|
V

Proceed to diagnosis

Diagnosis

Is the chemical known?
(e.g. by UN No., product label, shipping documents) —— YES ——>

Only a few substances need specific treatment (see also appendix 15):
Calcium oxide, calcium hydroxide (table 7)
Phosphorus, white or yellow (table 8)
Coumarin derivated pesticides (table 14)
Hydrofluoric acid, hydrogen fluoride, fluorides

|
NO
|
V

(table 16)
Organophosphorus and carbamate insecticides (table 17)
Cyanides (table 18)
Methanol and ethylene glycol (table 19)
Radioactive material (table 20)

What is the casualty's present state?	
Breathing is rapid, shallow, irregular or deep:	—> Table 3 and Appendix 3
The casualty has a cough, wheezing, hoarseness or severe breathlessness:	—> Table 9 and Appendix 9
The pulse is slow, weak or rapid:	—> Table 11 and Appendix 11
Blisters, burns or frostbite are present:	—> Table 8 and Appendix 8
The casualty is in a coma:	—> Table 4 and Appendix 4
The casualty has convulsions (seizures, fits):	—> Table 5 and Appendix 5
The casualty is vomiting:	—> Table 10 and Appendix 10
The casualty is restless, excited, confused or hallucinating:	—> Table 6 and Appendix 6
The casualty is jaundiced (yellow discoloration of skin or eyes):	—> Table 15
Urine output is decreased or absent:	—> Table 12 and Appendix 12
Blood is in the urine, vomit, or stool; the gums are bleeding; there are small haemorrhages (petechia) in the skin:	—> Table 14

|
|
V

What is the history of the present illness?
How did the illness start?
What are the symptoms?
Which symptoms are most troublesome?

|
|
V

What illnesses has the casualty suffered previously?

Make a record of any past illnesses, injuries, operations and present drug treatment.

The intervention referred to in the Medical First Aid Guide for Use in Accidents involving Dangerous Goods (MFAG) in the Supplement to the International Code of Dangerous Goods Transported by Sea (IMDG Code) shapes must be applied.

E. CONSIDERATIONS:

1. During docking and disembarking, necessary safety precautions are taken at docks.
2. The evacuation / loading process is done in accordance with the plan. Any modifications required to be made must be accepted by both the ship and the port representative.

F. MFAG - INSTRUCTION MANUAL

1. RESCUE

A leak, spill or gassed area must be adequately protected from exposure to the specified effects before entering for first aid. In the case of an undefined chemical, the worst case assumptions should be kept in mind.

ARRIVAL TO SCENE

When the scene is reached, the situation assessment must first be made and the size of the accident must be defined.

The Rescuer MUST NOT:

• Accessing the affected area without access to protective equipment and respiratory equipment,
• Despite the lack of training for entry into closed areas,
• Walking directly through leaks and rashes,
• To infect dangerous materials on the environment unnecessarily to equipment and equipment,
• To collect documents related to unprotected or unsafe transport,
• Exposure to effects when approaching the potential impact area,
• To engage in rescue without protective equipment and respiratory equipment,

CREATE EVENT LOCATION

• When it is deemed necessary, it is assumed that those who want to leave the zone are affected and are allowed to leave the scene if they are completely removed.
• Unaccompanied victims should not leave the zone with the support of persons without personal protective equipment and not trained properly.

CLASSIFICATION AND PRIORITY OF INSPECTIONS

Unconscious Victim Status
• Urgently need to be intervened in the accident which is unconscious for the treatment,
• Emergency assistance must be requested.

Multiple Unknown Victims Situation

If there are more than one casualty victims:

• Emergency assistance should be requested,

• Begin the intervention by giving priority to the worst case,
1) Respiratory arrest and non-pulse victim (See Table 2)
2) Unknown victim (See Table 4)

There is no cognizant but no respiration
The victim has unconscious and bluish skin color, but if breathing is present, it should be intervened by portable oxygen.

Neck and Back Trauma

When neck or back trauma is the case, it is necessary to move the victim without supporting the neck and back.

Priority: Respiratory Route, Respiratory Delivery, Circulation (A-B-C: Airway, Breathing, Circulation)

In order to prevent further damage to a survivor, first of all, the Respiratory Route must be open, Respiratory Provision, Interventions must be performed to ensure that the circulatory functions are functional.

Complete purification from chemical material
If the victim is exposed to chemical substances, the necessary action must be taken to completely purify the victim.

• All watches, jewelery and dresses suspected of being exposed to chemicals must be removed and removed from the body if necessary,
• The chemical substances that can be detected by eye should be removed with the help of a clean cloth and removed from the victim's body,
• Necessary precautions should be taken to avoid contamination of open wound chemical substance,
• All necessary precautions should be taken to avoid interfering with casualties when the chemical is infected by the body. If necessary, the rescuer should wear protective clothing to reduce the possibility of chemical contamination.
• Avoid spreading chemical contaminants in the body by wrapping the wounds.

Extraction of Survivor from the Event Site
The survivor must be removed from the scene after the chemical is completely removed from the body.

• If the casualties can be traversed, they should be directed to move away from the scene, taken to another area for thorough purification and detailed evaluation,
• If the victims can not walk, they should be removed from the scene with the help of a stretcher. If a stretcher is not available, the casualties must be removed from the scene and taken to another location for further evaluation.

CHEMICAL REMOVAL

• Take precautions to avoid contamination with open wound chemicals,
• First of all, clean the open wound and the chemical substance which is transmitted to the pus,
• Close the wounds so that they do not pass water after cleaning the wounds,
• Avoid interventions that cause mechanical and chemical abrasions,
• Gently wash the exposed area of the chemical material for at least 10 minutes using plenty of water, then continue to clean using soap and warm water and finally wash with a soft brush or a sponge for medical purposes,
• Pack all the chemical substances contaminated by the victim and send them to the waste disposal point,

SUMMARY OF KAZAZEDELERE INTERVENTION METHOD

• Respiratory tract is open, Respiratory Provision, Functionality of circulatory functions is priority.
• If the current situation permits, do primary and secondary assessments,
• Try to gather all the documents related to the transport of chemicals and their specifications,
• If there are multiple casualties, give priority to what is most critical,
• If the current situation allows, go to the proper treatment of symptoms and signs,
• Check casualties at frequent intervals, because chemical substances may have hidden psychological effects,
• Preventive interventions can be delayed until the chemical is cleaned,

2. CARDIO / LUNG ANIMATION

Respiratory tract Clearance, Respiration, Problems in circulatory function should be promptly diagnosed.

Control of Respiratory Function
• It is ensured that the respiratory tract is open by tilting the head of the victim with one hand with the back and holding it with the other hand with the chin,
• Pull your language forward,
• Vomiting in the mouth of the victim. remove all the obstacles that cause all the breathing found,
• Listen carefully to the mouth and nose area of the victim, because even if the airway is closed, even if there is no air flow, it can rise /
• Listen for 5 seconds to determine if you are breathing,

Control of Heart Functions

• Check your heart rate. In emergency situations, the best pulse control is done from the jugular vein. Try to feel the pulse of the victim for 5 seconds and decide if it is pulse afterwards,

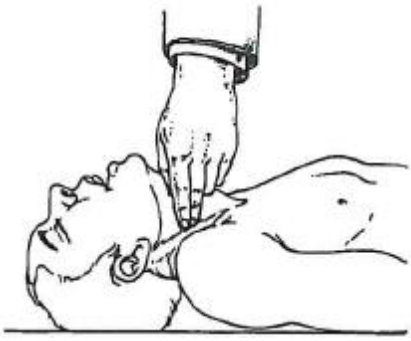

3. OXYGEN DELIVERY AND CONTROLLED VENTILATION

Oxygen is necessary for life. Some toxins block normal oxygen uptake and can block oxygen and therefore oxygen to the tissues. In some cases, life can be saved, especially by administering oxygen to the exposed toxic casuarcas. It is necessary to have a simple level of training for the oxygen supply business.

Diagnosis

• Breathing difficulty, trying to breathe 30 times per minute during the first stage. It may slow down afterwards or may be completely stalled,
• Rapid pulse, over 100 per minute,
• Skin color is blue / fading, purple lip and tongue,
• Weakness in the muscle system, followed by loss of consciousness in this process,
• In the first stage, pupils react to the light. If the pupils are grown up and do not react to the light, there is a life threatening,

Treatment

• Start giving oxygen using an oxygen mask. This initiative, combined with breathing assistance, helps keep breathing breathing controlled,
• The oxygen mask is placed on the face of the victim, making sure that the mask will not leak out, covering the nose and mouth.
• Check that the connections of the oxygen tube are in accordance with the manufacturer's instructions and that there is sufficient oxygen in the tube (2.5 liters capacity, 200 bar filled, 500 liters oxygen).

In general, medical assistance is required because of the inhalation of toxic gases in the normal

state of the chemical substance or the inhalation of toxic gases caused by a fire. As a result of the fire, carbon monoxide and hydrogen can cause the release of cyanide gases. In such cases, oxygen should be given 8 liters per minute.

In the case of life threatening, lung edema or circulatory system problems require 8 liters of oxygen per minute.

4. LOSS OF CONSCIOUSNESS WITH CHEMICAL LOADING

Inhalation of chemical gases, ingestion of the chemical substance or absorption through the skin may result in impaired brain function. After chemical poisoning, the victim may not only suffer from loss of consciousness, but also with respiratory distress and even respiratory arrest. Fortunately, in most cases, it was observed that the first symptom was recovered as a result of the accidental removal of the chemical substance from the environment.

Treatment

• When it is deemed necessary, it is useful to clean the eye and the substance infected by the body after it has been removed from the area contaminated with the chemical,
• The survivor should be observed after cleansing the chemical, usually a condition that requires intervention,
• Keep the victim in position to recover,

• Remove if the victim is wearing a denture,
• If there is a sore in the mouth as a result of vomiting,
• Position your face so that your face looks like the picture in the picture, pillow etc. using supporting materials,
• If vomiting is observed again, clean all deposits in the mouth again,
• It can not be left alone because it is the risk of vomiting repeatedly,
• If it is taking too long to get help, take the victim to the other position after 3 hours,

5. CONTACT OF EYE WITH CHEMICAL SUBSTANCE

As a result of chemical substance escapes, itching, burning, pain and worst case can be experienced in the worst case. **INITIAL TREATMENT HAS STARTED**.

Regardless of the symptoms, the first job is chemical cleansing.

• Immediately flush eyes with plenty of water,
• As shown in the picture, eyelids should be kept as open as possible,
• If the victim is using contact lenses, they should be removed,
• In water washing process, water must be supplied directly from the inner and outer corners. Washing should be continued for 10 minutes and time should be kept for this work.

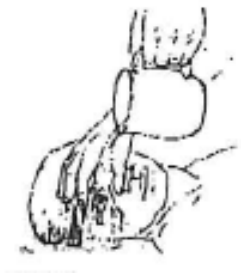

6. CONTACT WITH DEEP CHEMICAL SUBSTANCE

After extensive contact with the chemical, local damage such as chemical burning may occur. Chemical burns are visually similar to thermal burns, with redness, itching, swelling and painful feelings.

The substance can be absorbed through the skin and symptoms of poisoning in general can be observed. However, these symptoms may take hours to observe.

Ice flame can be observed if exposed to freezing gases, pressurized gases or solid carbon dioxide for a limited period of time. In theory it causes the same damage as chemical and thermal burns and is being treated. It is not a special treatment method but a method of interfering with chemical burns.

Regardless of the chemical substance and symptoms, areas that come into contact with the skin are removed.

• Chemical protective clothing and gloves should be worn while the body is being washed. There is no need to use protective material after decontamination,
• All watches, jewelery and dresses suspected of being exposed to chemicals must be removed and removed from the body if necessary,
• If the eye of the victim is also affected by the chemical substance, the eye should be intervened primarily,
• Continue washing the contact points using soap and shampoo for an additional 10 minutes to remove the chemical from the material.

7. CHEMICAL SUBSTANCE INJURY

Inhalation of chemical gases causes drowning:

• Exposure to burning chemical gases that may cause respiratory tract spasms or swelling in the respiratory tract,
• Accumulation of corrosive gases in the lung as liquid,
• Poisonings, for example due to carbon monoxide and cyanide,
• Respiratory mechanism and brain affected by chemical gases,
• The intake of oxygen by chemical gases that do not support life
Volatile liquids can usually have a pleasant smell and may also have effects such as drowsiness, headache.

Very few gases cause corrosive effects in the lungs.

Treatment

1. See CARDIO / LUNG ANIMALS section.

7. CHEMICAL MEDICINE FLUID

Occupations of the chemical substance; seldom suicide attempts, mixed with food and beverages, and poor personal hygiene.

In case of ingestion of toxic substances; vomiting and pain in the abdominal area. The worst cases are caused by chemicals with abrasive properties, strong acids, alkalis and substances with disinfectant properties.

In the event of ingestion of toxic substances, the symptoms of ingestion of toxic substances are generally observed.

In case of chemical substance ingestion, the following steps should be taken if the victim is in the right position and there is no difficulty in swallowing.

• It should help you to clean your mouth with water. One glass of water should be given for drinking.
• It is necessary to follow the survivor,
• Victims should not be encouraged to vomit.
• Salty water should not be given to induce vomiting. This initiative may bring the situation of the past to a more dangerous dimension.
• It is absolutely dangerous to induce vomiting by putting a finger in the throat of Kazazeden. As a result of the vomiting, there is a risk that chemicals coming into your mouth will escape to the pale borrowing.
• It is not advisable to drink large amounts of water to dilute the chemical at the edge. In such a case, the absorption of the chemical may be accelerated.

6.14 Procedures for Using EmS in Emergency Situations Related to Hazardous Materials

A. PURPOSE: It is written to guide the EmS in the case of emergencies related to Hazardous Materials.
B. SCOPE: It covers the emergency situations that occurred during the handling of Dangerous Goods within İsdemir Port Directorate.
C. RESPONSIBILITY: All employees and subcontractors are responsible for the handling of Hazardous Materials within the scope of İsdemir Port Directorate.
D. APPLICATION:

SOLAS (Safety of Life at Sea Convention) Part VII Part A and MARPOL (Convention for Prevention of Pollution from Ships) According to Annex III Rule 4 (2); a manifest of packaged hazardous and marine pollutants and a manifest or stack plan must be in the ship or stock zone concerned. This list is subject to the hazardous substance information specified in sections 5.4 and 5.5 of IMDG Code (International Code of Dangerous Goods Transported by Sea).

EmS means "Emergency Response Procedures for Vessels carrying Hazardous Substances" and the EmS codes are formed according to each UN number on the dangerous goods list in IMDG Code Section 3.2. EmS consists of two part codes, the ones that start with the letter "F" are called fire and the ones that start with "S" are called the spillage. The EmS tables are printed in addition to the IMDG code, fire guides are available from F-A to F-J, and debris guides from S-A to S-Z.

To illustrate through the fire scenario of a container that can be transported onboard a deck or ship hull, the difference in stacking area of the container seriously changes the mode of intervention.

Fire Emergency
• Cargo: UN 1339 PHOSPHORUS HEPTASULPHIDE Class 4.1
• Stack: Category B (above deck or below)
• EmS: F-G

If the above mentioned container is lit, the staff will refer to the relevant fire intervention manual by looking at the EmS section of the IMDG Code appendix using the UN number. The indeksten at the end of EmS will be used to reach this information. As shown in the following example, the UN number will be referenced to the relevant accident instructions according to the fire and scrap codes listed next to it.

UN No.	EmS Fire	EmS Spill	UN No.	EmS Fire	EmS Spill	UN No.	EmS Fire	EmS Spill
1247	F-E	S-D	1314	F-A	S-I	1379	F-A	S-J
1248	F-E	S-D	1318	F-A	S-I	1380	F-G	S-L
1249	F-E	S-D	1320	F-B	S-J	1381	F-A	S-J
1250	F-E	S-C	1321	F-B	S-J	1382	F-A	S-J
1251	F-E	S-C	1322	F-B	S-J	1383	F-G	S-M
1259	F-E	S-D	1323	F-G	S-G	1384	F-A	S-J
1261	F-E	S-D	1324	F-A	S-I	1385	F-A	S-J
1262	F-E	S-E	1325	F-A	S-G	1386	F-A	S-J
1263	F-E	S-E	1326	F-A	S-J	1387	F-A	S-J
1264	F-E	S-D	1327	F-A	S-I	1389	F-G	S-N
1265	F-E	S-D	1328	F-A	S-G	1390	F-G	S-O
1266	F-E	S-D	1330	F-A	S-I	1391	F-G	S-N
1267	F-E	S-E	1331	F-A	S-I	1392	F-G	S-N
1268	F-E	S-E	1332	F-A	S-G	1393	F-G	S-N
1272	F-E	S-E	1333	F-G	S-P	1394	F-G	S-N
1274	F-E	S-D	1334	F-A	S-G	1395	F-G	S-N
1275	F-E	S-D	1336	F-B	S-J	1396	F-G	S-O
1276	F-E	S-D	1337	F-B	S-J	1397	F-G	S-N
1277	F-E	S-C	1338	F-A	S-G	1398	F-G	S-N
1278	F-E	S-D	1339	F-G	S-G	1400	F-G	S-O

In the F-G table, it is important to pay attention to the type of fire intervention where the cargo is handled and where and in what case.

FIRE SCHEDULE Golf

F – G

WATER REACTIVE SUBSTANCES

General comments		In a fire, exposed cargoes may explode or their containment may rupture. Fight fire from a protected position from as far away as possible. Use of copious quantities of water at once is recommended to cool down the heat radiation of the fire and to cool down heated cargo nearby. Only as a secondary effect, water will start or intensify burning of that material. Do not use small quantities of water – this will react strongly.
Cargo on fire on deck	**Packages**	Do not use water or foam, smother with dry inert powdered material or let fire burn. If not practicable, cool nearby cargo with copious quantities of water, although burning of cargo could intensify for a short period of time. Do not spray small quantities of water onto the fire. Use copious quantities of water only.
	Cargo Transport Units	If the fire is not igniting nearby cargoes, let the fire burn. Otherwise, cool the burning transport unit with copious quantities of water. Try to avoid getting water into the container.
Cargo on fire under deck		Stop ventilation and close hatches. The fixed gas fire-extinguishing system should be used. If this is not available: Do not use water onto the material in enclosed spaces under deck. With open hatches, cool nearby cargo with copious quantities of water, although the fire could intensify for a short period of time. Do not spray small quantities of water onto the fire, use copious quantities of water.
Cargo exposed to fire		If practicable, remove or jettison packages which are likely to be involved in the fire. Otherwise, cool using water.
Special cases: UN **1415**, UN **1418**		*LITHIUM, non-pyrophoric* and *MAGNESIUM POWDER* require the use of dry Lithium chloride or dry sodium chloride or graphite powder to extinguish the fire. Do NOT use water or foam.

SPILLAGE SCHEDULE Golf

S – G

FLAMMABLE SOLIDS AND SELF-REACTIVE SUBSTANCES

General comments		Wear suitable protective clothing and self-contained breathing apparatus. Avoid all sources of ignition (e.g. naked lights, unprotected light bulbs, electric handtools, friction). Wear non-sparking footwear. Stop leak if practicable.
Spillage on deck	**Packages (small spillage)**	Wash overboard with copious quantities of water. Keep clear of effluent.
	Cargo Transport Units (large spillage)	
Spillage under deck	**Packages (small spillage)**	Do not enter space without self-contained breathing apparatus. Check atmosphere before entering (toxicity and explosion hazard). Collect and contain spillage if practicable. Dispose overboard. Collect spillage using soft brushes and plastic trays.
	Cargo Transport Units (large spillage)	Provide adequate ventilation. Do not enter space without self-contained breathing apparatus. Check atmosphere before entering (toxicity and explosion hazard). Collect and contain spillage if practicable. Dispose overboard. Collect spillage using soft brushes and plastic trays.
Special cases:		None.

Hazardous Material Emergency Emergency

- Cargo: UN 1339 PHOSPHORUS HEPTASULPHIDE Class 4.1
- Stack: Category B (On or Under Deck)
- EmS: S-G

When we looked at the EmS index, we saw the S-G code for the spillage. EmS also reaches the following table in the direction of this code. There is a difference in the form of intervention in the case of spillage on the open deck or on the closed deck.

E. FIRE AND SPILLAGE GUIDES OF HANDLED DANGEROUS GOODS:

1. Ferrosilicon (UN 1408) EmS - Fire Emergency Response Guide:

F–G
WATER-REACTIVE SUBSTANCES

General comments		In a fire, exposed cargoes may explode or their containment may rupture. Fight fire from a protected position from as far away as possible. Use of copious quantities of water at once is recommended to cool down the heat radiation of the fire and to cool down heated cargo nearby. Only as a secondary effect, water will start or intensify burning of that material. Do not use small quantities of water – this will react strongly.
Cargo on fire on deck	**Packages**	DO NOT use water or foam; smother with dry inert powdered material or let fire burn. If not practicable, cool nearby cargo with copious quantities of water, although burning of cargo could intensify for a short period of time. Do not spray small quantities of water onto the fire. Use copious quantities of water only.
	Cargo Transport Units	If the fire is not igniting nearby cargoes, let the fire burn. Otherwise, cool the burning transport unit with copious quantities of water. Try to avoid getting water into the container.
Cargo on fire under deck		Stop ventilation and close hatches. The fixed gas fire-extinguishing system should be used. If this is not available: *Do not* use water onto the material in enclosed spaces under deck. With open hatches, cool nearby cargo with copious quantities of water, although the fire could intensify for a short period of time. Do not spray small quantities of water onto the fire, use copious quantities of water.
Cargo exposed to fire		If practicable, remove or jettison packages which are likely to be involved in the fire. Otherwise, cool using water.
Special cases: **UN 1415, UN 1418**		*LITHIUM, non-pyrophoric* and *MAGNESIUM POWDER* require the use of dry lithium chloride or dry sodium chloride or graphite powder to extinguish the fire. Do NOT use water or foam.

2. Ferrosilicon (UN 1408) EmS - Spillage Emergency Response Guide:

S–N
SUBSTANCES REACTING VIGOROUSLY WITH WATER

General comments		Wear suitable protective clothing and self-contained breathing apparatus. Avoid all sources of ignition (e.g., naked lights, unprotected light bulbs, electric handtools, friction). Wear non-sparking footwear. Stop leak if practicable.
Spillage on deck	**Packages (small spillage)**	If dry, contain and collect spillage if practicable. Dispose of overboard. Avoid contact with water except to wash residues overboard with copious quantities of water. Keep clear of effluent.
	Cargo Transport Units (large spillage)	
Spillage under deck	**Packages (small spillage)**	Provide adequate ventilation. Check atmosphere before entering space (toxicity and explosion hazards). If atmosphere cannot be checked, do not enter. Do not enter space without self-contained breathing apparatus. Keep dry. Collect spillages using soft brushes and plastic trays. *If dry*, collect and contain spillage if practicable. Dispose overboard. *If wet*, use inert absorbent material. Do not use combustible material. Dispose of overboard.
	Cargo Transport Units (large spillage)	
Special cases: None.		

3. FERROUS METAL BORINGS, CUTTINGS (UN - 2793) Fire Emergency Response Guide:

F–G
WATER-REACTIVE SUBSTANCES

General comments		In a fire, exposed cargoes may explode or their containment may rupture. Fight fire from a protected position from as far away as possible. Use of copious quantities of water at once is recommended to cool down the heat radiation of the fire and to cool down heated cargo nearby. Only as a secondary effect, water will start or intensify burning of that material. Do not use small quantities of water – this will react strongly.
Cargo on fire on deck	Packages	DO NOT use water or foam; smother with dry inert powdered material or let fire burn. If not practicable, cool nearby cargo with copious quantities of water, although burning of cargo could intensify for a short period of time. Do not spray small quantities of water onto the fire. Use copious quantities of water only.
	Cargo Transport Units	If the fire is not igniting nearby cargoes, let the fire burn. Otherwise, cool the burning transport unit with copious quantities of water. Try to avoid getting water into the container.
Cargo on fire under deck		Stop ventilation and close hatches. The fixed gas fire-extinguishing system should be used. If this is not available: *Do not* use water onto the material in enclosed spaces under deck. With open hatches, cool nearby cargo with copious quantities of water, although the fire could intensify for a short period of time. Do not spray small quantities of water onto the fire, use copious quantities of water.
Cargo exposed to fire		If practicable, remove or jettison packages which are likely to be involved in the fire. Otherwise, cool using water.
Special cases: UN 1415, UN 1418		*LITHIUM, non-pyrophoric* and *MAGNESIUM POWDER* require the use of dry lithium chloride or dry sodium chloride or graphite powder to extinguish the fire. Do NOT use water or foam.

4. FERROUS METAL BORINGS, CUTTINGS (UN - 2793) Spillage Emergency Response Guide:

S–J
WETTED EXPLOSIVES AND CERTAIN SELF-HEATING SUBSTANCES

General comments		Wear suitable protective clothing and self-contained breathing apparatus. Avoid all sources of ignition (e.g., naked lights, unprotected light bulbs, electric handtools, friction). Wear non-sparking footwear. Stop leak if practicable. Dried out material may explode if exposed to heat, flame, friction, or shock.
Spillage on deck	Packages (small spillage)	Keep spillage wet. Dispose of solid material overboard. Wash overboard with copious quantities of water. Keep clear of effluent.
	Cargo Transport Units (large spillage)	
Spillage under deck	Packages (small spillage)	Keep spillage wet. Collect and contain spillage if practicable. Dispose of overboard. Collect spillage using soft brushes and plastic trays.
	Cargo Transport Units (large spillage)	
Special cases: None.		

5. COAL TAR (UN - 1999) Fire Emergency Response Guide:

F-E

NON-WATER-REACTIVE FLAMMABLE LIQUIDS

General comments		Cargoes in tanks exposed to heat may explode suddenly in or after a fire situation by a *Boiling Liquid – Expanding Vapour Explosion* (BLEVE). Keep tanks cool with copious quantities of water. Fight fire from a protected position from as far away as possible Stop leakage or close open valve if practicable. Flames may be invisible.
Cargo on fire on deck	**Packages**	Create water spray from as many hoses as possible.
	Cargo Transport Units	Cool burning transport units and nearby cargo exposed to the fire with copious quantities of water.
Cargo on fire under deck		Stop ventilation and close hatches. Use cargo space fixed fire-extinguishing system. If this is not available, create water spray using copious quantities of water.
Cargo exposed to fire		If practicable, remove or jettison packages which are likely to be involved in the fire. Otherwise, keep cool for several hours using water.
Special cases: **UN 1162, UN 1250, UN 1298, UN 1717, UN 2985**		Cargoes will create hydrochloric acid in contact with water: stay away from effluent.

6. COAL TAR (UN - 1999) Spillage Emergency Response Guide:

S-E

FLAMMABLE LIQUIDS, FLOATING ON WATER

General comments		Avoid sources of ignition (e.g., naked lights, unprotected light bulbs, electric handtools). Liquid is flammable and spillage may evolve flammable vapours. Wear suitable protective clothing and self-contained breathing apparatus. Stop leak if practicable. In general, substances covered under this schedule will have fuel-oil-like properties. They are immiscible with water and are liable to float on the surface of water. The use of inert absorbent material, as used in machinery spaces, is appropriate in all cases. For sticky liquids, shovels may be used, preferably shovels made of non-sparking or non-ferrous material. You may use light oil or soap-like products (surfactants) to clean small areas. Clean the area thoroughly because of the flammability hazard. Any pumping of spilled liquid overboard will create an oil spill on the sea surface. In this case, contact coastal authorities. Report discharge overboard according to MARPOL reporting requirements.
Spillage on deck	Packages (small spillage)	Collect spillage in oil drums, metal boxes or salvage packagings. You may use inert absorbent material.
	Cargo Transport Units (large spillage)	Restrict flow of leakage to an enclosed area (e.g., by diking with inert material or cement). Collect spillage in oil drums, metal boxes or salvage packagings. You may use inert absorbent material. Otherwise, wash overboard with copious quantities of water.
Spillage under deck	Packages (small spillage)	Shut off possible sources of ignition in the space. Provide adequate ventilation. Do not enter space without self-contained breathing apparatus. Check atmosphere before entering (toxicity and explosion hazard). If atmosphere cannot be checked, do not enter. Let vapours evaporate. Collect spillage in oil drums, metal boxes or salvage packagings. You may use inert absorbent material. Keep collected spillages in well ventilated areas or on deck only.
	Cargo Transport Units (large spillage)	Shut off possible sources of ignition in the space. Provide adequate ventilation. Do not enter deck without self-contained breathing apparatus. Check atmosphere before entering (toxicity and explosion hazard). If atmosphere cannot be checked, do not enter. Let vapours evaporate. Where a ventilation system is used, particular attention should be taken in order to prevent toxic vapours or fumes entering occupied areas of the ship, e.g., living quarters, machinery spaces, working areas. Provide good ventilation of the space. Use water spray on effluent in the space to avoid ignition of flammable vapours. Wash down to the bottom of the hold. Use copious quantities of water. Treat effluent according to Shipboard Oil Pollution Emergency Plan. Otherwise, radio for expert ADVICE.
Special cases:		
UN 1136, UN 1993		These substances may be miscible with water and hence not float on the surface. In this case, SPILLAGE SCHEDULE S-D will be appropriate.
UN 1139, UN 1263, UN 1866		No thorough cleaning of spillage site necessary. Residues will dry out and coat surfaces.

7. BENZENE (UN - 1114) Fire Emergency Response Guide:

F–E

NON-WATER-REACTIVE FLAMMABLE LIQUIDS

General comments		Cargoes in tanks exposed to heat may explode suddenly in or after a fire situation by a *Boiling Liquid – Expanding Vapour Explosion* (BLEVE). Keep tanks cool with copious quantities of water. Fight fire from a protected position from as far away as possible Stop leakage or close open valve if practicable. Flames may be invisible.
Cargo on fire on deck	**Packages**	Create water spray from as many hoses as possible.
	Cargo Transport Units	Cool burning transport units and nearby cargo exposed to the fire with copious quantities of water.
Cargo on fire under deck		Stop ventilation and close hatches. Use cargo space fixed fire-extinguishing system. If this is not available, create water spray using copious quantities of water.
Cargo exposed to fire		If practicable, remove or jettison packages which are likely to be involved in the fire. Otherwise, keep cool for several hours using water.
Special cases: **UN 1162, UN 1250, UN 1298, UN 1717, UN 2985**		Cargoes will create hydrochloric acid in contact with water: stay away from effluent.

8. BENZENE (UN - 1114) Spillage Emergency Response Guide:

S–D

FLAMMABLE LIQUIDS

General comments		Wear suitable protective clothing and self-contained breathing apparatus. Avoid all sources of ignition (e.g., naked lights, unprotected light bulbs, electric handtools, friction). Stop leak if practicable. Avoid contact, even when wearing protective clothing. Spillage may evolve flammable vapours. Contaminated clothing must be washed off with water and then removed.
Spillage on deck	**Packages (small spillage)**	Wash overboard with copious quantities of water. Do not direct water jet straight onto the spillage. Keep clear of effluent. Clean the area thoroughly.
	Cargo Transport Units (large spillage)	Keep bridge and living quarters upwind. Wash overboard with copious quantities of water. Do not direct water jet straight onto the spillage. Keep clear of effluent. Clean the area thoroughly.
Spillage under deck	**Packages (small spillage)**	Shut off all possible sources of ignition in the space. Provide adequate ventilation. Do not enter space without self-contained breathing apparatus. Check atmosphere before entering (toxicity and explosion hazard). If the atmosphere cannot be checked, do not enter. Let vapours evaporate, keep clear. Provide good ventilation of the space. Use water spray on effluent in hold to avoid ignition of flammable vapours. Wash down to the bottom of the hold. Pump overboard.
	Cargo Transport Units (large spillage)	Keep bridge and living quarters upwind. Protect crew and living quarters against corrosive or toxic vapours by using water spray to drive vapours away. Do not enter space. Keep clear. Radio for expert ADVICE. After hazard evaluation by experts, you may proceed. Provide adequate ventilation. Do not enter space without self-contained breathing apparatus. Check atmosphere before entering (toxicity and explosion hazard). If atmosphere cannot be checked, do not enter. Let vapour evaporate, keep clear. Where a ventilation system is used, particular attention should be taken in order to prevent toxic vapours or fumes entering occupied areas of the vessel, e.g., living quarters, machinery spaces, working areas. Provide good ventilation of the space. Use water spray on effluent in the space to avoid ignition of flammable vapours. Wash down to the bottom of the hold. Use copious quantities of water. Pump overboard.
Special cases:		
Marine Pollutant Mark		Report incident according to MARPOL reporting requirements.
UN 2749		Self-ignition of spilt material is possible.
UN 3359		This is a cargo transport unit under fumigation. When opened, it will be ventilated. However, experience has shown that toxic fumigants will stay within packaging material and in non-ventilated areas. Obtain information about the fumigation agent.

6. DOCUMENTATION, CONTROL AND RECORD

7.1. Procedures for defining, providing and controlling of all necessary documents and information relating to Dangerous Goods

The documents considered to be beneficial for dangerous cargo handling facilities at the port are listed below:

a. IMDG Code (with corrections and amendments)
b. The EmS Guide: Emergency Response Procedures for Ships Carrying Dangerous Goods, (with corrections and amendments)
c. Medical First Aid Guide for Use in Accidents Involving Dangerous Goods (MFAG), (with corrections and amendments)
d. Recommendations on the Safe Transport of Dangerous Cargos and Related Activities in Port Areas
e. International Convention for the Safety of Life at Sea (SOLAS) 1974, (with appendixes)
f. International Convention for the Prevention of Pollution from Ships 1973 as modified by the Protocol of 1978(MARPOL 73/78), (with appendixes)
g. 26 February 2007 Dated MSC.1/Circ.1216
h. Regulation on Transportation of Dangerous Goods via Seaway
i. Ports Directive
j. Relevant laws, regulations, circulars, announcements, instructions and application instructions.

7.2. Procedures for keeping the current list of all Dangerous Goods existing at the coastal facility site and other information

List of Dangerous Goods within the framework of port ship following file are recorded.

7.3. Procedures for controlling and reporting of control results of the definition of Dangerous Goods entering to the facility, using the correct shipping name of the Dangerous Goods, classification, certification, loading and shipping to the safely to the load carrying unit.

Notification rules for Dangerous Goods entering to the port facility are as follows. Controls will be performed when arrived as specified in ISDEMIR Port Operations Instructions at control points.

Before arriving to the port through land way:

It is not envisaged to transport dangerous good to the ISDEMIR Port by land.

Before arriving to the port by ship:
Before reaching to the port by ship, site planner shall determine Dangerous Goods based on loading plan of the ship. Transportation name of the Dangerous Goods, hazard class, packaging group and

UN number shall be defined and recorded to the port operation system. Cargos shall be transported to the tanks for storing after unloading operations.

7.4. Preparation, possession and use of Dangerous Goods safety information sheets (DGSS)

Beside general taken precaution measures with regard to Dangerous Goods at ISDEMIR PORT, Safety Data Sheet is requested from supercargo for every Dangerous Goods or dangerous cargo and dangerous content goods. A special ISDEMIR PORT Dangerous Materials Safety Data Sheet is prepared to provide work safety and health of personnel if HSSE authority or MSDS provider concerns. It is the general standard that each cargo entered to the port facility must have a Safety Data Sheet. Measures specified in Safety Data Sheet about storage, transportation and emergency conditions are taken immediately by ISDEMIR Port Authorities.

7.5. Procedures for keeping record and statistics of dangerous cargo

Data about Dangerous Goods are statistically recorded regularly and reported as requested from authorities. Reports are saved in soft-ware formats and kept safely easily to access. Input data for each ship is entered to the ATLANTIS soft-ware program of UDHB to provide a database for statistical evaluation. Input data is recorded to the port ship follow list for the same purpose.

8. EMERGENCY CASES, PREPAREDNESS AND RESPONSE TO EMERGENCY

8.1.Intervention methods for Dangerous Goods posing risk to life, property and/or environment and other dangerous cases in which Dangerous Goods involved

It is carried out according to ISDEMIR ERP (Emergency Response Plan).

Emergency response plans will always be in force and practice. Emergency response plans include the followings:

- Scope and relations with other plans
- Dangerous cargo located at terminal sites
- Rules and responsibilities
- Emergency condition types
    - Facility, Site, Cargo fires
    - Explosion
    - Accidents and injuries
    - Natural disasters like earthquake
    - Unfavorable weather conditions such as storm
    - Leakage or bulk of Dangerous Goods
    - Sea pollution (For Example: Oil /fuel leakage)
    - Power cut
    - Ship fires
- Emergency response procedures

- Intervention procedures for emergency responses
- Training and practices
- Emergency response plan management
  - Coordination with external parties

8.2. Capacity, ability and opportunity of coastal facility in case of emergency

The opportunity for intervention to the emergency cases encountered during 24 hours is limited with facility's technical capacity and man power. Public or private sector co-operation is organized if the capacity of the facility is inadequate in case of an emergency or natural disaster. Appendix-7 gives capacity and opportunity of the facility in case of a fire and Appendix-12 gives during a spillage.

8.3. Arrangements for the first responses for accidents involving Dangerous Goods (first response methods and procedures, resources and capabilities and so on issues)

Following rules are considered in case of an accident:

- If exposed to any dangerous good, related first aid measures given in Section 4 of the Safety Data Sheet of the related good is applied by considering the toxic effects of the good given in Section 11.

- If one gets injured, first aid measures are applied based on the properties of the dangerous good or medical personnel is called, however the injured person must certainly not be moved.

- Appropriate personal protective clothes and equipments must be used by people who perform first aid intervention for protecting from environmental conditions. These people shall move the injured person to the outside of the infected site if injured one is affected from the environment (toxic gases or smoky environment)

- If the injured person contacts with corrosive goods, he/she must take of clothes spreaded that substance immediately.

- Emergency telephone numbers given in Section 8.4 is called; ambulance or support call is applied.

- However, it seems minor injuries, all of the accidents and injuries must absolutely be reported to the PORT AUTHORITY.

8.4. Necessary notification to be made in case of emergency inside and outside of the facility

The following emergency units and number given below shall be used in case of emergency:

CCTV Control Room, Hotline	*+90 (326) 758 45 80 – 3780 – 3182- 3680- 3280 0324- 2373954-2412762- 2377198*
Health, Safety and Environment Department	*0326-2412730-2412748*
Shift Supervisor	*+90 (326) 758 46 80* *+90 (530) 763 46 49*
ISKENDERUN Port Authority	*+90 (326) 614 11 92* *Fax: +90 (326) 614 02 26*
Police	*155*
Ambulance	*112*
Firefighting department	*110*
Coast guard	*158*

8.5. Reporting Methods of the Accidents Procedure

DISTRIBUTION:
This procedure; The personnel who are responsible for carrying out the duties and procedures of the dangerous cargoes that are responsible for carrying out the tasks given by this procedure shall be distributed to the personnel and unit managers of the personnel who will carry out this procedure.
GOAL:
This procedure; aims to explain the principles of notification to the relevant Harbor Master about the accidents and incidents occurring during the handling and handling of dangerous cargoes.
SCOPE:
This procedure includes all personnel who have duties and responsibilities in the process of handling and handling of dangerous cargoes.
REFERENCE:
Implementing Regulation on the Transport of Dangerous Goods by Sea
Guidance on the Regulation of the Composition of Dangerous Goods
DEFINITIONS:
Handling: The similar procedures for the transport of dangerous cargoes without altering their essential characteristics, displacement, transfer, separation, staging, mixing of large containers from small containers, renewal, replacement or repair of cargo transportation units and packages,
Accident: during the transport and / or storage of dangerous goods by sea or at coastal facilities; a chain of events or events involving harmful substances such as death, injury, property damage and environmental pollution, hazardous substances or dangerous substances involved,
Coastal facility: Limits determined by the Administration, where the ships can safely carry out cargo and / or passenger loading / unloading, maintenance or repair operations, docks, piers, buoys, platforms and anchorages, approach areas, closed and open storage. buildings, buildings and structures used for administrative and service purposes,
Incident: The sequence of incidents or events that occur in connection with operations and activities in a coastal facility and which may endanger the safety of the facility, of the people or other persons in the facility or of the environment, which may endanger or not be corrected,
Hazardous goods conformity certificate (TMUB): The document issued by the Contracting Entity that the coastal facilities, which carry out dangerous goods handling and temporary storage operations, must take under the scope of the regulation,
Dangerous cargo (dangerous goods) Packaged substances listed in the International Code on the Transport of Dangerous Goods by Sea (IMDG Code), U International Maritime Solid Bulk Loads Code (IMSBC Code) Bulk items with UN Number in Annex-1, The International Code on the Construction and Equipment of Ships Carrying Hazardous Chemicals (IBC Code) and the International Code on the Construction and Equipment of Ships Carrying Liquefied Gas in Bulk (IGC Code) are not listed in Chapter 19, substances which have the potential to cause damage to life, property and other substances during transportation due to their physical, chemical or transport characteristics, packaging and cargo transport units where such materials are transported and not properly handled,
Regulation: By-Law on the Transportation of Dangerous Goods by Sea published in the Official Gazette dated March 3, 2015 and numbered 29284 testify.

RESPONSIBILITIES:
Unit supervisor: Planning the discharge and discharge processes of dangerous cargoes in accordance with the legislation, in case of an accident or incident, to notify the relevant authorities to the relevant authorities by way of deleting the accident and incident notification.
Responsible of Unit: Monitoring and controlling the discharge and discharge of dangerous cargoes in accordance with legal regulations, reporting accident and incident to the unit chief in the event of an accident or incident,
Unit Personnel: To carry out the discharge and discharge processes of dangerous cargoes in accordance with the legal regulations, and to report the accident and the incident to the unit responsible in the event of an accident or incident,

APPLICATION:
İsdemir; According to the Regulation on the Transportation of Dangerous Goods by Sea, it has the responsibilities and responsibilities of the load related and coastal facility operator.
In article (11) (f) of the Regulation, the ″ Load related b clause stipulates the dangerous load accidents that occur in the area of responsibility. In the subparagraph (I) of Article 11 of the same regulation, ı Coastal Facility Operation Liman informs the Port Authority about the dangerous cargo accidents occurring in the area of business responsibility.
In this context, the reporting of accidents and incidents will be carried out in accordance with the following principles.

1- Communication
Communication channels in order to determine the communication methods inside the port, outside of the facility and to manage emergency situations effectively in emergency situations that may occur in the port facility;
• Fixed and Mobile Phones
• Computers
• Radio
• Siren
• Messengers.
In case of an emergency in the port, internal communication is provided primarily by wireless and internal telephones. Port Ship communication is carried out by radio or VHF marine band radio which is given by the Port.
In case of any emergency situation in the port, secure communication is ensured with the authorities, neighboring facilities and related parties as soon as possible.

2- Reports
Emergency Management Center; The Emergency Situation in the port will operate the reporting system as soon as possible to inform the relevant authorities. It shall record the records of these reports, which contain information that must be notified in an emergency, in a healthy way. Hazardous load accidents will be reported to the Port Authority. Although there is not a specified format of the report to be submitted to the Port Authority, it will cover the following information about the accident.
• When the accident occurs,
• If the boiler is known and how it has occurred,
• The location of the accident (coastal facility and / or ship), position and domain,

• If the ship is involved in the accident, the information (name, flag, IMO number, equipment, operator, load and amount, captain's name and similar information),
• Meteorological conditions,
• The UN number of the dangerous substance, the appropriate transport name (to be used in the legislation specified in the definition of the dangerous substance) and the amount,
• Danger class of the dangerous substance or the lower hazard section, if any,
• Packing group if you have dangerous goods,
• Additional risks of hazardous substances, such as marine pollutants,
• Details of marking and labeling of dangerous substances,
• The packaging, cargo transport and container properties and number of the dangerous goods, if any, the manufacturer, sender, carrier and receiver of the dangerous substance,
• The extent of the damage / pollution occurred,
• Number of casualties, dead and missing,
• Emergency response by the coastal facility for the accident.

Accidents and incidents at İsdemir coastal facility; First of all, the Port Manager / Chief Operating Officer shall notify the Port President or his / her relevant personnel from the wire lines. The nature of the accident, the nature of the accident, the time, the number of dead or injured personnel, if any, will be taken or measures to be taken.

Following the verbal notification, the accident prevention activities and the reports of accidents and incidents related to the dangerous goods that will occur after the completion of the emergency procedures shall be issued by the Port Operation Chief and shall be sent to the port authority following the approval of the Port Manager.

8.6. Coordination with formal authorities, support and cooperation methods

Management of any emergency cases and coordination with authorities, support and collaboration structured is followed as specified in App-7 /Emergency Response Process Diagram for out of working hours, Emergency Response Process Diagram for working hours and App-9/Emergency Response Organization Scheme.

Operation Coordinator manages emergency response plan and all his team. All activities are followed based on the Emergency Response Plan. The coordinator is the contact person for related formal authorities.

If Operation Coordinator is absent, Site Scene Coordinator undertakes all responsibility.

Institutions to get contact, coordination and support are listed below with contact numbers:

İSKENDERUN District Governorate	**0326 614 23 23**
İSKENDERUN Chief Public Prosecution Office	**0326 613 28 24**
İSKENDERUN Garrison Command	**0326 615 38 92**

İSKENDERUN Provincial Gendarmerie Command	**0326 613 02 02**
İSKENDERUN Coast Guard Command	**0326 614 23 11**
İSKENDERUN Police Department	**0326 614 21 23**
İSKENDERUN Port Authority	**0326 614 11 92**
İSKENDERUN Clearance Department	**0326 614 00 19**
İSKENDERUN Metropolitan Municipality	**0326 613 49 90**
Fire Department	**110**
Emergency Ambulance Service	**112**
İSKENDERUN State Hospital	**0326 613 35 70**
İSKENDERUN Provincial Health Directorate	**0326 613 29 29**

8.7. Emergency Evacuation plan for the removal of the ships and boats from the coastal facility in case of emergency

Emergency conditions occurred during removal of the ships and boats from the coastal facility in case of emergency, pre-during and after evacuation notifications and operation plans are given below:

In case of a fire in the ship or pier and beach facilities where operation is run:

The personnel who first sees or hears about the fire (ship operation personnel, crane operators, harbor security personnel, CCTV staff, technical personnel or any port staff) communicate with the numbers listed in Section 8.4 of this document to inform about the emergency. Health, Safety and Environmental Departments can be called within the working hours and Shift Supervisor except working hours. After notification, the captain of the ship decides whether ship will leave the port or not with communicating ISDEMIR authorities and Port President by considering the incident context and progress and then stages listed below followed:

- If operation is still running it is stopped and working staff is transferred into a safer place.
- If fire is on the ship, coastal connections of the ship are closed immediately in a safe way and Crane booms are heaved.
- Fire department is informed about firefighting procedures in the port and operation personnel is informed about the fire location and entrance of the fire extinguishing vehicles into the site.
- Pilotage, towage organization and hawser are informed about pushing off the ship as soon as possible and tow boast are requested into the site.
- Tow boats equipped with fire extinguishing devices are requested for prevention of fire from the sea.

- Port Presidency is called and informed that the ship will leave the port because of the emergency.

- If the ship engine is running and to be able to push off, it is provided to ease away dock line to leave the ship from the coast. If the ship engine is not running, it is provided by tow boats.

- Operation is managed by Port Authority within the working hours and Shift Supervisor within non-working hours.

Cutting of the rope of the ship moored to the pier due to sudden storm or wind:

Weather conditions should always be monitored by the Port Operator. Operation personnel, operators and skeleton crew in the ships moored to the pier is informed in case of severe strong storm warnings. Firstly, enhancement of the ropes of the ship and keeping ready ship's machine to move based on the severity of the storm is provided under every circumstance. Before operation stops or goes on, following procedures are followed in case of cutting of the rope of the ship moored to the pier:

- If ship loading and evacuation is going on, coastal connection is closed immediately and it is informed that ship is going to leave the dock.

- Coastal operator shall inform by radio or telephone for emergency that the towages will leave the dock as soon as possible, although the ship pilotage and towage services are informed by VHF channel.

- New rope could be provided to the dock based on the captain of the ship's decision and the ship is reconnected or unmoored and provided to leave from the dock.

Port Authority is informed if the ship under operation is obliged to leave the dock due to force majeure.

8.8. Procedures for disposal and handling of waste involving Dangerous Goods and damaged dangerous cargos

It has been carried out in the framework of Waste Management Directive/APP-19.

IMDG Code classifies Dangerous Goods into different dangerous classes and each dangerous class has its own unique hazards and risks. During discharge operations if any leakage from dangerous good is experienced following potential hazards may be observed:

- Lack of inhalation effect,
- Toxicity,
- Infection in living organisms and burn effect,

- Irritation and skin burn,
- Fire in working areas,
- Increase in potential fire or fire expansion,
- Explosion

For these reasons, it is required to ensure that Dangerous Goods with leakage possibility are safely and carefully handled, whole protective materials and properties function in an appropriate and accurate way, incidents related to leakage are systematically and periodically reported. Furthermore, it is essential to ensure that potential leakage is prevented by checking all flanges, fittings, joints and piping lines in the system. If any leakage is experienced, the area exposed to leakage incident is required to clean and remove professionally with regard to related rules, directives and regulations.

Methods and steps that should be followed including leakage cleaning and removal process are listed in the workflow diagram below:

The role of Environmental Unit about handling with bulk liquid dangerous good leakage possibility:

- Environmental Officer checks the area which exposes to leakage.
- When huge amount of leakage and spills are experienced, before controlling leakage Material Safety Data Sheet (MSDS) of spilled or leaked material is definitely obtained. Environmental Officer gives decisions to follow up actions according to hazard type and nature of spilled dangerous good.
- If necessary, firefighting team, crew and truck are stand by and ready outside.
- When removal process of spilled or leaked dangerous good or contaminated materials with Dangerous Goods is arranged, these goods are removed outside of the facility.
- If required records related to leakage and removal process are kept.
- The first area where leakage or spill observed is checked also by Environmental Officer and if any environmental pollution occurs, it is required that the pollution is cleaned and removed in an appropriate and suitable manner.
- If required, according to material property personal protective equipments are used during operation.
- After leakage stops, depending on the level of leakage complete area which is exposed to leakage or contaminated by leakage is properly cleaned via emergency response equipments or by Emergency Response Company.

General process and provisions to follow are listed below:

- After leakage has been detected, firstly incident area is surrounded and enclosured:
  Area which is exposed to leakage is surrounded by safety strip and any access to unauthorized personnel is not allowed and responsible bodies are informed.
- Risk assessment is carried out in order to identify potential risks:
  The type of spilled or leaked material, the source of leakage and the amount of leaked material are determined. IMDG Data and Material Safety Data Sheet of dangerous good are

obtained and in details examined.

- Required Personnel Protective Equipment (PPE) is provided:
  Before taking action against leakage incident necessary personnel protective equipment and materials are provided.
- If possible, leakage is taken under control and restricted in order to prevent expansion of spill or leakage. In order to prevent bigger expansion of the leakage or spill, at first safety barriers around leakage or spill area is provided.
- If possible, from source of the leakage, leakage or spill is cut down:
- Cleaning and removal of leakage is initiated:
  Leakage is not cleaned or made contact with inflammables such as wood shavings; rather is cleaned by using dry, neutral and absorber materials such as damper kit, sand, sorbent barriers and pads.
  If small amount of liquid leakage is the matter in the question, absorber material/substance is put onto leakage surface. If high amount of liquid leakage is the matter in the question barriers are put into place around leakage incident area.
  Spill of leaked materials through soil, underground water and sub-ground water is prevented and controlled.

- Waste Disposal
  Recovery packages that Dangerous Goods are put inside and sent to disposal facility are required to become approved UN-type recovery and storage packages. Gathered dangerous substances from leakage incident area are collected and kept steadily and appropriately into Temporary Waste Collection Area.
  As it is stated in Environmental Law and concerning Waste Disposal Regulations, these collected wastes are given to official licensed hazardous waste transportation companies in order to remove them from port, transfer and dispose them into Waste Disposal Facility.

8.9. Emergency Training and their records

Following trainings, inspections and tests together with participants are periodically carried out as it is stated below. Trainings and controls which were carried out are recorded by PORT AUTHORITY and these records are shared with and distributed to parties in the events. Saving records are kept minimum for 3 years and later on they are disposed.

8.10 Information about Fire Protection System

Emergency and fire equipments are listed below:

- Fire Hydrants
- Fire Extinguishers
- Fire Hoses and Fire Cabinets
- Fire Alarm Detectors in the Sites, Emergency Lights and Glass Breaking Hammers and Units
- Electrical Fire Pumps

- Other Diesel Fire Pumps

Emergency Equipments:

- Emergency Case Telephone Numbers
- Building & Gangway Fire Plan
- Emergency Safety Signs

Emergency and Fire Equipments:

8.11. Procedures For Approval Of The Fire Protection System, Control, Testing, Maintenance And Making Available For Use

Fire Hydrants: Port Authority must keep the list of all fire hydrants. PORT AUTHORITY is the responsible body for quarterly controls and tests and monthly control and tests. On the other hand, Technical Department is the responsible body for repairment and maintenance. Control records are kept by Port Authority.

Fire Extinguishers: PORT AUTHORITY must keep list of all fire extinguishers and they are responsible for monthly controls. Upon all fire extinguishers there must be a sticker or card written last control date, next control date and personnel number of responsible employee from ISDEMIR.

Technical and periodical controls of fire hydrants and extinguishers are performed by independent, authorized, accredited and notified third parties from legal Turkish institutions. Valid certificates and control records must be kept by PORT AUTHORITY and must be updated.

Fire Hoses and Fire Cabinets: PORT AUTHORITY must keep list of all fire hoses and fire cabinets. PORT AUTHORITY is the responsible body for quarterly controls and checks. Technical Department is the responsible party for repairment and maintenance. Control records must be kept by PORT AUTHORITY.

Fire Alarm Detectors in the Sites, Emergency Lights and Glass Breaking Hammers and Units: Repairment and maintenance are carried out by Technical Department with regard to predesignated schedule and entire records must be performed by Technical Department.
Electrical Fire Pumps: Repairment and maintenance are carried out by Technical Department with regard to predesignated schedule and entire records must be performed by Technical Department.
Other Diesel Fire Pumps: Repairment and maintenance are carried out by mobile check and maintenance team with regard to predesignated schedule and entire records must be performed by Technical Department.

Other Emergency Equipments:

Emergency Case Telephone Numbers - PORT AUTHORITY is the responsible body for

arranging accurate and updated telephone and communication number list of all emergency case departments and institutions.

Building Fire Plan – When applicable a copy of Fire Plan must be placed onto alarm panel. Department Manager or Unit Manager is the responsible body for the arrangement of updated and current Fire Plan version.

Emergency Safety Signs – Each department manager or unit manager is the responsible body for safety trips and their arrangements. PORT AUTHORITY is the responsible unit for determining "Escape Routes" and "Assembly Position" and hang these documents on predesignated announcement boards.

8.12 Measures To Be Taken in Cases Where the Fire Protection System is Out of Work

When there is an emergency operation requirement and firefighting and protection systems don't function, the nearest emergency team is informed by urgently calling telephone numbers written in the Article 8.4.

8.13 Other Risk Control Equipments

Firefighting on Sea
ARTICLE 32 –

1) Potential sea fires in the port administration area are responded by legal and independent parties in the context of "Regulations for Prevention, Fighting and Rescue Precautions against Fires in the Land and Its Expansion Level in the Land and Fires in the Land and its Expansion Level Sea, Port or Coast Included", which was published by the decision of the Cabinet in the Official Gazette on 06/08/1975 and numbered 7/10357. Stationary and mobile fire extinguishers and first aid equipments and units must be ready to use on the coast facilities.

2) Fighting and protection activities against all potential fires on coast facilities are performed by using necessary fire extinguishers and equipments and tools with respect to concerning Regulations and Legal Directives. Fire-fighting activities that may occur in the coastal resort are carried out by fire-fighting teams who are equipped with necessary tools and equipment according to the related legislation. Facilities performing tug boating also participate in the protection and extinction of fire activities in the framework of port authorities in question.

9. OCCUPATIONAL HEALTH AND SAFETY

9.1 Occupational Health and Safety Precautions

In the terminal all kinds of universal occupational health and safety rules are valid and in use and they must be strictly followed.

In order to have an efficient and competent occupational health and safety integrated application, port authority must wholly understand health, safety, security and environmental protection management systems, fully adopt and implement them and actively encourage employees to participate the process.

It must be always kept in mind that taken actions or activities by someone not only positively or negatively affect him but also do affect entire community. In order to take into consideration these points and operate and work effectively and safely without any accidents or injuries, following rules and obligations should be carefully followed:

Alcoholic beverages and drugs are strictly forbidden in port facility.

Smoking is only allowed in predesignated areas called “Smoking Areas”. In the following areas smoking is strictly forbidden as well:

- Whole building used by ISDEMIR including workplaces
- Entire facilities or machineries of ISDEMIR
- Decks and open area of incoming ships and vessels
- Storage and tank farm sites
- Areas where flammable liquids or substances are handled, used, transferred or stored
- Areas where batteries are recharged and UPS devices are available

Inside port facility, portable radio or other electronic devices, “Walkman” type listening tools, headsets, earphones or such devices are forbidden.

In the port facility, at minimum level following personnel protective equipments are required to be used:

- High visibility jacket or high visibility clothes
- Safety helmet
- Protective shoes

Symbolic Safety Signs

Symbolic safety signs are used in order to inform and justify instructions via sizes, colours and symbols. In order to protect health, safety and environment and overcome language barriers appropriate symbols and pictures (pictogram) are used.

These kinds of safety signs are used to protect everyone:

- Don't neglect symbolic safety signs!
- If it is not your duty to remove symbolic safety signs, don't remove or touch safety signs!
- Don't scratch, paint or destroy symbolic safety signs!

Prohibition Signs

These symbolic safety signs are circle, lower surface is white, around of the signs are red and has a cross line. Pictogram is black, has the centre location in the sign and under cross line. This sign has a meaning not to take an action.

These prohibition signs are listed below. However, they are not limited to following signs:

SMOKING IS NOT ALLOWED

KEEP FIRE AWAY

NO PEDESTRIAN ACCESS

LOOSE CLOTHES ARE FORBIDDEN

ONLY FOR AUTHORIZED STAFF

NO CAR ACCESS

NO BICYCLE

SPRAYING PRESSURED GAS ON YOUR BODY FORBIDDEN

NO ALCOHOLIC BEVERAGES

PHOTOGRAPHY FORBIDDEN

Warning Signs

These symbolic safety signs are triangular, lower surface is yellow and around of signs are black. Pictogram is black and has the center location of the sign. This sign warns due to certain risks or hazard. Some of warning signs are listed below, however they are not limited to following signs:

GENERAL HAZARD

CORROSİVE SUBSTANCE HAZARD

FIRE HAZARD

EXPLOSION HAZARD

TOXIC MATERIAL HAZARD

SUSPENDED LOAD HAZARD

FALLING OBJECTS OVER HEAD HAZARD

MOVING PARTS HAZARD

BE AWARE OF WORKING FORKLIFT

MOVING BOOM HAZARD

Prohibition Signs

These symbolic safety signs are circular, lower surface is blue. Pictogram is white and has the center location of the sign. This sign clarifies which specific attitude or movement is required or expected or states which personnel protective equipments are required so as to protect from danger. This sign means some actions are required to be taken.

OBLIGATORY TO WEAR HIGH VISIBILITY JACKET

OBLIGATORY TO WEAR SAFETY HELMET

OBLIGATORY TO WEAR SAFETY SHOES

OBLIGATORY TO WEAR SAFETY GLOVES

OBLIGATORY TO WEAR SAFETY EAR PROTECTORS

OBLIGATORY TO WEAR EYE PROTECTOR

OBLIGATORY TO WEAR FACE PROTECTOR MASK

OBLIGATORY TO WEAR SAFETY WORK CLOTHES

OBLIGATORY TO WEAR SAFETY GAS MASK

OBLIGATORY TO WEAR DUST MASK

OBLIGATORY TO WEAR SAFETY BELT

KEEP WORKING SPACE CLEAN

OBLIGATORY TO USE VENTILATION

OBLIGATORY TO USE SAFETY CHAMBER

OBLIGATORY TO WEAR SAFETY SHELTER

General Information Signs

These symbolic safety signs are square or rectangular and lower surface is green. Pictogram is white and has the center location of the sign. This sign gives specific information. For instance, certain places such as emergency runaways and escape routes, first aid and rescue equipments' places in a facility, center are shown via these signs.

GENERAL DIRECTION

FIRST AID EQUIPMENT

ESCAPE ROUTES

PEDESTRIAN WAYS

WAITING AREAS

LADIES WC

GENTLEMEN WC

EMERGENCY CASE SHOWERS

EMERGENCY EYE WASHING STATION

POTABLE WATER

Fire Prevention and Fire Protection

These symbolic safety signs are square or rectangular and lower surface is yellow and around of the sign is red. Pictogram is red and has the center location of the sign. This sign states the location of the firefighting equipments and fire centers.

THE LOCATION OF FIRE FIGHTING EQUIPMENTS

FIRE EXTINGUISHER

FIRE HOSE

FIRE HYDRANT

FIRE EXTINCTION SYSTEM SHUTDOWN VALVE

FIRE PUMP CONNECTION

FIRE BLANKET

FIRE ALARM

FIRE TELEPHONE

FIRE STATION MANAGER

Work Permit:

Work permit documents shall include the followings:

- Details of work done
- Taken precautions while working duty
- Predesignated hazard statements
- The situation of applied control measures

Work permit should be used for the works which standard operational procedures are not included. Work permit is required for non-routine and non-standard works in workplaces, terminal sites, port, in the sea or a part of facility with potential risk and hazard. Different work permits are available for different works. Works required work permits are listed below; however, they are not limited with this list:

- Works done in limited spaces
- Hot works
- Works done with Dangerous Goods
- Works done in the sea or nearby sea
- Works done in pressurized systems
- Excavation work in terminal area
- Electric works
- Work at height

For all non-routine works and for all sub-contractor works it is required to obtain work permit.

9.2 Information About Personal Protective Clothes And Procedures For Using Them

Personal Protective Equipment types, standards, using locations, using instructions in order to protect employees and workers from potential hazards and risks due to performed activities must be as APPENDIX-13/Personal Protective Equipment Using Instructions.

10.OTHER CONDITIONS

10.1 Validity of Dangerous Goods Conformity Certificate

The Obligation of Getting Document and Permit (General)

- Coast facilities which handle Dangerous Goods and goods must obtain "Dangerous good Competency Certificate" in the framework of Transportation of Dangerous Goods and Goods via Maritime Regulation".

- If temporarily it is not possible to follow concerning provisions of regulation, special permission from Port Authority must be obtained.

The Obligation of Having Dangerous Good Competency Certificate

In ISDEMIR Port Facility, transportation, storage, handling, loading, unloading, labeling, marking activities of dangerous substances are performed. For that reason, Dangerous good Competency Certificate will be provided in the framework of Having Dangerous Good Competency Certificate Regulation.

10.2 Defined Tasks for Dangerous Goods Safety Consultant

The real duty of consultant is that, under the responsibility of Operation Officer, to determine appropriate tools and activities in the limit of facility capacity and enable the management of these activities in the safest way.

In the view of activities inside facility, certain tasks of a consultant are listed below:

- The monitoring of compliance with dangerous good transportation;

- Presentation of recommendations to the facility about dangerous good transportation;

- The preparation of an annual report about operational activities of the facility including dangerous good transportation and presentation of this annual report to facility administration or a local authority. This type of reports is kept for 5 years and if needed it is delivered to national authorities.

The duties of a consultant at the same time include controls of following applications and methods related to administration:

- Compliance procedures with requirements which determine dangerous good transportation;

- Consideration of special obligations related to transportation vehicles when acquiring transportation vehicles for the facility;

- Control methods of equipments used transportation, loading and unloading of Dangerous Goods;

- Training of facility employees including amendments in the regulations, the inventory of training records;

- The application of appropriate emergency methods if any accident or near miss accidents occur while transportation, loading or unloading of Dangerous Goods,

- Making research and preparation of report about serious accidents, incidents or serious mistakes while transportation, loading or unloading of Dangerous Goods;

- The application of necessary precautions against accidents, incidents or serious mistakes;

- The measurement of sensibility of subcontractors or third parties on legal rules and special requirements about dangerous good transportation;

- The approval of competency of workers in the transportation, loading or unloading units of Dangerous Goods about necessary operational procedures and instructions;

- Taking precautions in order to get prepared better against the potential risks while transporting, loading or unloading Dangerous Goods;

- The application of notification procedures about documents which must be available in the vehicles while transporting Dangerous Goods and compliances of these documents with current regulations and legal directives;

- The application of notification procedures about the requirements of loading and unloading processes.

10.3 Issues on ships transporting Dangerous Goods leaving /coming to the coastal facility by land (necessary documents that road vehicles carrying dangerous good have during entrance and exit from coastal facility site or port, equipment and tools that vehicles must have, speed limits at port etc; measures to be taken regarding the threats and attacks from land and sea)

Incoming and outgoing of dangerous goods to/from ISDEMIR Port via roads are not in use. Types of hazards, threats and attacks coming from roads and seas and necessary precautions related to these actions are included in the port ISPS Plan. All actions are taken in the framework of approved ISPS Port Safety Plan against threats coming from roads and seas.

10.4 Issues on ships transporting Dangerous Goods lay of/on from the coastal facility by sea road (lighthouse or signs shown by the ships transporting Dangerous Goods and marine vessels at coastal facility, cold or hot work procedures at the ships etc.)

If a ship or vessel participate in an operation about transportation or handling of Dangerous Goods, a special sign which is visible both day and night time must be used.

The reason why daytime and night time signal are used is that, to inform sea traffic in the port area and personnel about existing Dangerous Goods in the vicinity and increasing hazard due to dangerous good handling. Signal and signs that will be used are listed below:

- Daytime: "B" flag (I am having Dangerous Goods, loading, unloading or carrying) and
- Night time, Red light that can be visible from 360°

Cold and Hot Working Types for Ships Carrying Dangerous good in the Port:

In order to perform repairment and maintenance by hot and cold activities, ships and sea vehicles which gas treatment action is taken place on must be followed provisions of "Regulations about Gas Treatment while Construction, Repairments, Maintenance and Demontage Activities on Ships and Sea Vehicles" which was published in the Official Gazette dated 21.12.2004 and numbered 25677.
Except allowed special cases in ISDEMIR Port, hot work and gas free operations are not allowed.

10.5 Other Issues Added By Coastal Facility

Forbidden Activities

ARTICLE 21 -

(1) In the access channels, pierage entrances, berthing and slipping spaces, anchorage areas of coastal facility; any kinds of fisheries hunting, yachting, rowing or other aqua sports activities are strictly forbidden.

(2) Sport, leisure and recreational ships and yachts must proceed only in the limit areas with pierages and bays in the manner that they don't block activities of other ships and vessels. Port Authority has right to assign speed limits when they are required.

(3) Except ships and sea vehicles coming in or leaving from buoy mooring and ships and sea vehicles used for the services of coastal facilities, any other ships, vessels or sea vehicles are not allowed to proceed and cross in buoy mooring or between buoy mooring lines.

(4) Ships, vessels or sea vehicles can't be moored and berthed if coastal facility doesn't have any legal permit or if any coastal facility doesn't have any legal owner or operator. However, only if Port Authority allows an urgent case for an appropriate coastal facility, temporary arrangements may happen.

(5) If any ship, vessel or sea vehicles have substantial trim or have tendency to create potential hazard and ship and sea vehicles with visible damages and potential environmental pollution risk and ships and sea vehicles carrying heavy goods or pulling another vehicle without any legal permit are not allowed to be moored or berthed unless Port Authority gives special permission.

Other Issues subject to Port Authority Permit

ARTICLE 22 -

(1) After getting necessary permits and permissions from legal institutions and authorities, in order to start-up coastal facility and water production area construction installation activities, responsible bodies ask for permission from Port Authority.

(2) Buoying, diving, submarine and underwater activities and such activities always require permission or a work permit from Port Authority. Ships and sea vehicles used for these purposes provide day signs by appropriate light and give sound signs as it is stated in the regulations and legal directives.

(3) Races starting from one port administration area until another port administration area require a permit from Port Authority. In order to get this permit for race, an application to Port Authority before 15 days from the race must be carried out. Other races and competitive activities require a permit which at least 7 days before the race an application must be made.

(4) Without any valid permit from Port Authority it is not allowed to make race and competitive activities and organizations in the port administration area.

(5) Water sport activities in the port administration area are organized with respect to "the Regulation of Touristic Purposed Sport Activities", published in the Official Gazette on 23/02/2011 with number 27855 and other regarding legal directives. All rights of Port Authority about providing human health and environmental safety and security of the water sport activities and races are reserved. Port Authority has right to organize, arrange all kinds of restrictions, limitations, interruption against these activities considering upon human health and environmental safety and security of the port and activity.

(6) Without any permission or valid permit from the Port Authority, any other ships, vessels or sea vehicles are not allowed to go alongside ships, vessels and sea vehicles waiting at anchor or at the coast. Agency and food boots, public ships, refueling ships, water tankers and coastal facility service vessels can go alongside and excluded from restricted list. These sea vehicles can provide services as long as Port Authority Manger is informed. A coordinative work between coastal facility and these exceptional ships and vessels is needed.

(7) Ship captain or agency informs Port Authority Manager before making refueling or water fueling operation.

(8) Fishery boots and yachts can go alongside with boards of boots and yachts. However, they are not allowed to moor double line.

(9) Ships, vessels and other sea vehicles need a valid permit from Port Authority in order to make maintenance, rasp and paint operations and other hot works and lifeboat release into sea and other maintenance works. If ships and sea vehicles which need valid permit for these operations are on the coast, they have to make coordinative operations with coastal facility.

(10) Coastal facilities in the port administration area send a notice of their geographic positions to the Oceanographic and Hydrology Department of Navy Forces in order to record their positions into sea maps.

(11) Ships and sea vehicles are not allowed to change their anchorage sites without valid permit from Port Authority. However, under extreme weather and sea conditions, they can proceed their positions and they can anchor in a safer anchorage site without notification. Even if it is so, responsible bodies must inform Port Authority as soon as possible. The responsible body for implementation and coordination of this item is Port Authority if a Ship Traffic Service Center is available.

(12) Ship and sea vehicles which don't operate any activities in coastal facility, however need to anchor in anchorage area due to via major such as extreme weather or sea conditions, potential hazards against human health and environmental safety must inform as soon possible Port Authority or Guide Organization. The responsible body for implementation and coordination of this item is Port Authority if a Ship Traffic Service Center is available.

(13) Ships and sea vehicles are not allowed to berth head of other ships and sea vehicles which already stern to side berthed.

(14) In the limits of port area, beach regions and coastal hotels, pensions, holiday villages and sites, sea areas until 200 metres from the coast, floating equipments are prepared and kept working by responsible bodies every year 1st of April- 15th of November in order to determine maximum limits of swimming allowance. Ships and sea vehicles are not allowed to proceed in the predesignated swimming allowance areas. Port Authority is the responsible body for making amendments and changes of limits considering human health and environmental safety.

(15) Transshipment operations in the port administration area are subject to permit of port Authority and Port Authority Manager.

(16) Backup procedures are performed following valid permit from Port Authority with regard to predesignated principles and plans by Port Authority.

(17) Requirements of kedge and anchoring operations in each port are regulated by Port Authority and operation procedures and principles are specified by Port Authority.

(18) Ships and sea vehicles without a valid permit for berthing to coastal facility and guide service to ships and sea vehicles without port exit certificate or anchoring order or receipt is subject to valid permit from Port Authority.

(19) Provisions about anchoring, berthing and sail routes of daily excursion boots are stated by Port Authority in view of the fact that waste delivery schedule and organization of other services and are approved by Board of Directors. Port Authority Manager may decide some restrictions or limitations on capacity, entrance-exit and utilization if any overcapacity of anchoring and berthing areas is observed.

10.6 Hazardous Waste Management

Hazardous Waste Management:

Activities related to temporary storage, sending waste for disposal/recycling of any kind of waste resulted from ISDEMIR activities within the framework of Waste Management will be fulfilled according to principles and procedures of APPENDIX-19.

10.6 Definitions/Abbreviations

Packaging: It is a container, in which Dangerous Goods are put as defined IMDG Code Section 6,

Packer: Land or coastal facility personnel is a real person or a legal entity who places Dangerous Goods into a larger container or various kinds of containers including intermediate load containers, packaging the Dangerous Goods and make them ready to carry, changing the labels of Dangerous Goods packages if necessary by following the instructions of the sender,

Ministry: Ministry of Transport, Maritime Affairs and Communications,

Bulk Cargo: Solid, liquid or gaseous goods located in a structural part of a ship or stable tank or storehouse in or on the ship and which planned to be carried without protection,

Handling Process: It is defined as replacing, transferring from small containers to the larger ones, ventilating, separating, screened, mixing, changing of cargo transfer units and containers and repairing and some similar procedures of dangerous goods without changing their basic characteristics,

Fumigation: It is defined as the application of chemicals in the form of solid, liquid or gas to a cargo transfer unit or ship storehouse due to destroying harmful organisms,

Gas metering: It is defined as detection of gasses and their amount determined by cargo transfer unit or Administration Office within related regulations by authorized organizations and people with special devices and apparatus,

Degasification: It is defined as active or passive ventilation of cargo transport units from gasses which are classified as fumigation context but harmful to life, property or environment and decided to have values higher than values specified in the related legal directive by risk assessment evaluations,

Gas forming products: It is defined as products which cause gas formation which is harmful to individuals' life due to properties of transferred goods or their gas releasing properties in cargo transfer units although no fumigation is used,

IBC Code: International Code about Construction and Equipments of the Ships Carrying Bulk Liquid Dangerous Goods Having Spillage Possibility,

IGC Code: International Code about Construction and Equipments of the Ships Carrying Bulk Liquefied Gas Having Spillage Possibility,

IMDG Code: International Code about Dangerous Goods Transferred via Seaway,

IMO: United Nations International Maritime Organization,

IMSBC Code: International Maritime Solid Spillage Cargos Code,

ISPS Code: International Ship and Port Facility Security Code,

Administration: General Directorate of Regulation of Combined Transportation of Dangerous Goods,

Captain: A person, who conducts and navigates a ship,

Timbering Code: Safety Application Code about Ships Carrying Timber Cargo at a deck,

Coastal Facility: It is defined as building and engineering structures used for administration and services, and anchor locations, platforms, buoys, docks, piers, shelters used for ships' safe cargo and passenger transportation. Boundaries of the facility are defined by Administration Office,

Personal Protective Equipment (KKM or PPE): It is defined as all tools, devices and clothes designed for protecting personnel from one or more risks that affect health and safety aroused from operation,

Container: A cargo transport unit that has a certificate appropriate for standards under CSC contract,

Modus Operandi: A Latin phrase used to describe a person's working methods or habits (In criminology terminology it means both "occurrence type of the case" or "perpetrator method" and used in a criminal profile to obtain clues about the perpetrator's psychology),

SOLAS: International Agreement for Safety of Life at Sea dated 1974,

Grain Code: International Code for the Safe Transport of Grain Having Spillage Possibility,

Carrier: It means real person, legal entity, receiver, proposer, actual transporter, broker, ship owner, transportation organizer, transportation broker and ship agency on behalf of its own or other third parties who organize transportation of Dangerous Goods by land or rail related with combined transportation with or without contract,

Hazardous Waste: It means unpredictable directly usage of solutions, mixtures, used packages and cargo pieces which are carried for reprocessing, dumping, burning or disposal of dangerous cargo or package or cargo transfer units which are classified as specified in Basel Convention and transportation provisions and class determined as in SOLAS,

Dangerous Good (Dangerous Cargo): It includes Petrol and Petroleum Products within the scope of International Convention for the Prevention of Sea Pollution by Ships (MARPOL 73/78) App-II, Listed Packaged Goods within the scope of International Code (IMDG Code) on Dangerous Goods Transported by Sea, Bulk Goods having UN number

within the scope of International Maritime Solid Bulk Cargo Code (IMSBS Code) App-1, Goods given within the scope of International Code on Construction and Equipment of the Ships Carrying Bulk Dangerous Chemicals Section 17, Goods given within the scope of International Code on Construction and Equipment of the Ships Carrying Bulk Liquefied Gasses Section 19, Goods which are not classified into these lists but pose possible risk to life, property, environment or other goods due to physical-chemical properties of transportation types and packages of these goods or not cleaned packages or cargo transportation units,

Toolbox interviews: It includes interviews performed for transferring experience, ensuring motivation, create awareness and informational purposes such as general information, special conditions, broken equipments, previous accidents, extra conditions before 15 minutes of shifting schedule,

UN number: It defines a four-digit identification number of dangerous goods or parts based on the United Nations Regulation,

Shipper: It includes a real person or legal entity who loads/unloads/stacks dangerous or potentially Dangerous Goods to a ship, marine vessel, vessel or cargo transport unit based on the instruction of the sender or labels, plates, handles including dangerous goods in cargo transport unit,

Cargo responsible body: It includes the sender, receiver, representer and transportation broker of Dangerous Goods,

Cargo transport unit: It includes road trailers, semi-trailers and trailers, portable tank and multi-element gas container, railway wagon and tank wagon, container and tank container which are designed for transportation of packaged or bulk dangerous goods.